Preface

Thank you for purchasing Digital's Pro-face GP-477R/577R Series of Graphic Control Panels (hereafter referred to as the "GP unit").

These GP units, with their expanded user functionality and improved overall performance, are an upgrade of Digital's GP70 series panels.

Please read this manual carefully as it explains, step by step, how to use the GP correctly and safely.

Also, in this manual's examples, the Mitsubishi MELSEC-AnA Series PLC is used whenever possible, connected in a one-to-one relationship with a GP.

The GP-477R and GP-577R Series refers to the following GP model numbers:

GP-477R Series GP477R-EG11 (Standard unit)
GP477R-EG41-24VP (CE-marked, cUL compliant)

GP-577R Series GP577R-TC11, GP577R-SC11 (Standard unit)
GP577R-TC41-24VP (CE-marked, cUL compliant)

* Here, "Standard unit" refers to units that have not received either CE or UL approval.

The GP477R-EG41-24VP and GP577R-TC41-24VP graphic panels are CE-marked products that comply with the following, relevant EMC directives.

EN55011 class A
EN50082-2 (GP477R-EG41-24VP)
EN50081-2 (GP577R-TC41-24VP)

<Note>

1) It is forbidden to copy the contents of this manual, in whole or in part, except for the user's personal use, without the express permission of the Digital Electronics Corporation of Japan.
2) The information provided in this manual is subject to change without notice.
3) This manual has been written with care and attention to detail; however, should you find any errors or omissions, please contact Digital Electronics and inform them of your findings.
4) Please be aware that we are not responsible for any damages resulting from the use of our products, regardless of article 3 above.

All Company/Manufacturer names used in this manual are the registered trademarks of those companies.

© Copyright 1998, Digital Electronics Corporation

Table of Contents

Preface i

Table of Contents ..... ii - iv
Safety Precautions ..... v - vi
UL/c-UL (CSA) Application Notes vii
CE Marking Notes vii
What is IP65f? viii
Package Contents ix
Symbol Information x

Chapter 1 - Introduction

1.1 Operating the GP 1-1
1.2 System Design 1-2
1.3 Optional Equipment 1-4

Chapter 2 - Specifications

2.1 General Specifications 2-1
1. Electrical Specifications 2-1
2. Environmental Specifications 2-2
3. Structural Specifications 2-2

2.2 Features and Performance 2-3
1. Display Features 2-3
2. Screen Memory 2-4
3. Touch Panel / Clock Accuracy 2-4
4. External Interfaces 2-5

2.3 Interface Specifications 2-6
1. Printer Interface 2-6
2. AUX I/F (Input/ Output) 2-7
3. Serial Interface 2-9

2.4 Names and Functions of GP Parts 2-10

2.5 Graphic Panel Dimensions 2-11
1. GP-477R Series External Dimensions 2-11
2. GP-577R Series External Dimensions 2-12
3. Installation Fasteners 2-13
4. GP Installation Mounting Hole Dimensions 2-14

Chapter 3 - Installation and Wiring

3.1 Installation 3-1

1. Creating an Installation Opening 3-1
2. Installation Direction 3-3
3. Securing the Installation Fasteners 3-3
4. Inserting and Tightening the Fasteners 3-4

3.2 Wiring Cautions 3-5

1. Connecting the GP's Power Cable 3-5
2. Connecting the GP Power Supply Terminals 3-6
3. Connecting the GP's Power Supply 3-7
4. Grounding the GP 3-8
5. Placement of I/O Signal Lines 3-9

3.3 Connecting the Printer Cable 3-9

3.4 GP Tool Connector 3-10

Chapter 4 - OFFLINE Mode

4.1 Entering OFFLINE Mode 4-1

1. When Turning the GP's Power ON 4-1
2. From Forced Reset 4-2

4.2 OFFLINE Mode's Main Menu 4-3

4.3 INITIALIZE - Standard Operation 4-4

4.4 SELF-DIAGNOSIS - Standard Operation 4-6

4.5 Transferring Screen Data 4-8

Chapter 5 - Initializing the GP

5.1 Initialization Screen 5-1

5.2 Transferring the Screen Data 5-2

5.3 SYSTEM ENVIRONMENT SETUP 5-3

1. SYSTEM SETUP 5-3
2. SYSTEM AREA SETUP 5-4
3. GLOBAL WINDOW SETUP 5-5
4. CHARACTER STRING DATA SETUP 5-6

5.4 SET UP I/O 5-9

1. SET UP SIO 5-9
2. SET UP PRINTER 5-10
3. SET UP TOUCH PANEL 5-11
4. COMMUNICATION SETUP 5-13
5. Display Device Settings 5-14

5.5 PLC SETUP 5-15

1. SET UP OPERATION SURROUNDINGS (1:1) 5-15
2. SET UP OPERATION SURROUNDINGS (n:1) 5-16
3. STATION SETUP (n:1) 5-17
4. CUSTOMIZE SETUP(n:1) 5-19

5.6 INITIALIZE MEMORY 5-21

5.7 SET UP TIME 5-21

5.8 SET UP SCREEN 5-22

Chapter 6 - GP RUN Mode and Errors

6.1 GP RUN Mode 6-1

1. After Powering Up the GP 6-1
2. Via OFFLINE Mode 6-1

6.2 Troubleshooting 6-2

1. Possible Types of Trouble 6-2
2. Troubleshooting Checklists 6-3

6.3 SELF-DIAGNOSIS 6-7

1. SELF-DIAGNOSIS Item List 6-7
2. SELF-DIAGNOSIS - Details 6-8

6.4 Error Messages 6-11

1. Error Message List 6-11
2. Error Message Details 6-12

Chapter 7 - Maintenance

7.1 Regular Cleaning 7-1

1. Cleaning the Display 7-1
2. Installation Gasket Replacement 7-1

7.2 Periodic Check Points 7-3

7.3 Changing the Backlight 7-4

Index

Safety Precautions

This manual includes the information that must be followed to operate the GP correctly and safely. Read this manual and attached manuals to thoroughly understand the correct operation and functions of your GP.

Usage of Icons

Throughout this manual, to allow you to use the GP correctly, the following icons are provided next to the operations that require special attention. The operations described with these icons contain essential safety information. The following is an example of the icons and their meanings:

WARNING	Indicates situations where severe bodily injury, death or major machine damage can occur.
CAUTION	Indicates situations where slight bodily injury or machine damage can occur.

Warnings

Be sure to follow these guidelines when operating your GP.

- Because of the danger of an electric shock, confirm that the Power Cord is not plugged in to the main power before connecting the Cord's terminals to the GP.
- Whenever changing the GP's backlight, to prevent electric shocks or burns, be sure to unplug hte GP's power cord and wear protective gloves.
- Because many GP internal parts carry high voltages, electric shocks can occur when taking the unit apart. *Please do not disassemble the GP*!
- Do not use power that is beyond the GP's specified voltage range. If you do, it may cause a fire or an electric shock.
- Do not atempt to modify the GP unit. It may cause a fire or an electric shock.
- Do not use the GP in an environment containing flammable gas since it may cause explosion.
- The GP uses a lithium battery for backing up its internal clock data. If the battery is incorrectly replaced, the battery may explode. To prevent this, please contact your local GP distributor before replacing the battery.
- Do not use GP touch panel keys or switches for life-threatening or vital disaster prevention situations. Use separate hardware switches for such keys.
- Be sure to design your equipment system so that no machine will malfunction due to a communication fault between the GP and its host controller. This is to prevent any possiblity of personal injury or property damage.

To Prevent Damage to the GP:

- Never strike the touch panel with a hard or heavy object, or push on the touch panel with too much force, since it may damage the unit.
- If the GP is used in an environment that has temperatures in excess of the allowed range, the GP may malfunction.
- Do not allow water, liquids, or metal particles to enter inside the GP's chassis, since they can cause either a GP malfunction or an electrical shock.
- Avoid restricting the GP's naturally occuring ventilation, or storing or using the GP in an environment that is too hot.
- Avoid using or storing the GP in direct sunlight, or in excessively dusty or dirty environments.
- Because the GP is a precision instrument, do not store or use the GP where powerful shocks or excessive vibration will occur.
- Do not store or use the GP where chemicals and acids evaporate, or where chemicals and acids are dispersed into the air.
- Do not use paint thinner or organic solvents to clean the GP.
- After turning this unit OFF, be sure to wait a few seconds before turning it ON again. If the unit is started too soon, it may not start up correctly.

Important ***Be sure to back up all screen data regularly.***

About the GP's Display Panel

- The Display Panel contents and the Contrast Adjustment affect the intensity of *Contouring*. (i.e, when some parts of the screen are brighter than others, creating a wavelike pattern)
- There are minute grid-points (dark / light) on the Display Panel's surface. This is part of the GP's design and not a defect.
- Shadows may appear at the top of the LCD. This is normal for an LCD display.
- Sometimes the display area may look as if the display colors have changed. This is a common attribute of LCD's and is not a defect.
- Displaying a single image for long periods can cause an afterimage to remain when the display is changed to another screen.

To prevent this effect:

- Set the unit to "Stand-by Mode", which turns the screen OFF automatically when there is no input for a specified period of time.
- Do not display any single screen for a long period of time. Try to always change the screen display periodically.

UL/c-UL (CSA) Application Notes

The GP477R-EG41-24VP and the GP577R-TC41-24VP graphic panels are both cUL compliant (UL file No.E182139).
The GP complies with the following standard:

- UL508

Industrial Control Equipment

- UL1604

Electrical Equipment for Use in Class I and II, Division 2, and Class III Hazardous (Classified) Locations

- CAN/CSA-C22.2, Nos.142, and 213-M1987

Standards regarding the safety of the information technology equipment including electrical office appliances

GP477R-EG41-24VP (UL file No.: 2780027-01)
GP577R-TC41-24VP (UL file No.: 2780027-02)

- This unit must be installed so that its front face faces the user.
- If natural air cooling is used, the GP must be installed into an upright panel. In addition, an open space of 100 mm or more is required in all directions behind the unit's rear face. Unless this requirement is satisfied, the temperature inside the GP's components may rise beyond the limit specified by the UL standards.

UL1604 Compliance Conditions and Operating Precautions

1. Power, input and output (I/O) wiring must be in accordance with Class I, Division 2 wiring methods, Article 501-4 (b) of the National Electrical Code, NFPA 70 or as specified in Section 18-152 of the Canadian Electrical Code for installations within Canada and in accordance with the authority having jurisdiction.
2. Suitable for use in Class I, Division 2, Groups A, B, C and D hazardous location, or nonhazardous locations only.
3. WARNING: Explosion hazard-substitution of components may impair suitability for Class I, Division 2.
4. WARNING: Explosion hazard-do not disconnect equipment unless power has been switched off or the area is known to be nonhazardous.
5. WARNING: Explosion hazard-when in hazardous locations, turn off power before replacing or wiring modules.

CE Marking Notes

The GP477R-EG41-24VP and GP577R-TC41-24VP graphic panels are CE-marked products that conform to EMC directives. EN55011 class A, EN50082-2 (GP477R-EG41-24VP), and EN50081-2, and EN50082-2 (GP577R-TC41-24VP).

What is IP65f?

This unit's protection rating of IP65f is actually a composite code, consisting of the internationally recognized British "Ingress Protection" standard (BS EN 60529:1992) - "IP65", and the standard developed by the Japanese Electronics Manufacturer's Association (JEM) - "f". This code is used in this manual to identify a given product's degree of structural resistance to a variety of environmental elements and thus, prevent problems or accidents related to the inappropriate use of a product.

The individual meaning of each character of this code is explained below. This code indicates the degree of ingress protection provided from the front face of the PL, and assumes that the PL is securely mounted into a metal panel.

IP	6	5	f
(1)	(2)	(3)	(4)

(1) Designates the type of protection provided.

(2) Indicates the degree of protection provided to the human body by the unit, and the degree of protection provided by the unit's front face from particles/dust intrusion into the interior of the unit.

Here, "6" indicates that the unit is completely protected from dust intrusion.

(3) Indicates the degree of protection provided by the unit's front face from water intrusion into the interior of the unit.

Here, "5" indicates that the unit is protected from water intrusion from a direct water jet.

(4) Indicates the degree of protection provided by the unit's front face from oil particle intrusion into the interior of the unit.

Here, "f" indicates that the unit is completely protected from oil intrusion via either oil particles or oil splashes from any direction (to the front panel).

Note: For information about the GP's protective structure, refer to page 2-3.

Package Contents

The GP's packing box contains the items listed below. Please check to confirm that all items shown below have been included.***1**

GP Unit

GP477R-EG11, GP477R-EG41-24VP
GP577R-TC11, GP577R-TC41-24VP
GP577R-SC11

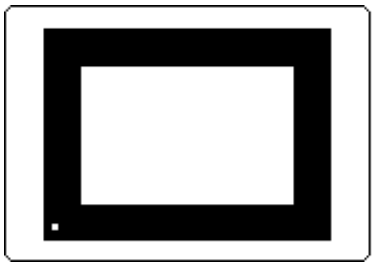

Operation
Instructions (1)

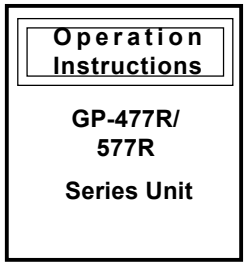

Installation fasteners (4/set)

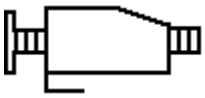

This unit has been carefully packed, with special attention to quality. However, should you find anything damaged or missing, please contact your local GP distributor immediately for prompt service.

***1** This manual (GP-477R/577R Series User's Manual) is sold separately.

Symbol Information

The list below describes the symbols used in this manual.

Symbol	Meaning
Warning	Used to indicate situations where severe bodily injury, death or major machine damage can occur.
Caution	Indicates situations where slight bodily injury or machine damage can occur.
Important	Indicates important information or procedures that must be followed for correct and risk-free software/device operation.
Careful!	Indicates information or procedures that must be followed to ensure proper software/device setup and operating conditions.
STOP	Indicates actions/procedures the User should not attempt.
*1	Indicates useful or important supplemental information.
1) , 2)	Indicates steps in a procedure. Be sure to perform these steps in the order given.
Reference	Refers to useful or important supplemental information.
Note:	Provides useful or important supplemental information.
GP Screen Editor	Indicates the GP-PRO/PBIII for Windows screen editor software.
PLC	Abbreviation for Programmable Logic Controller.
n:1	Indicates a multi-link type connection is used.

Chapter 1
Introduction

1. Operating the GP
2. System Design
3. Optional Equipment

1.1 Operating the GP

Be sure to follow these steps when operating the GP unit.

1 Preparation

Before using the GP, check that all required hardware is present and read all specification, wiring, and installation information.
Reference *Chapter2, "Specifications", and Chapter 3, "Installation and Wiring"*

2 Screen Design

Create a sample screen and design a Tag layout, with the Screen layout sheets and Tag lists provided in the Editor software.
Reference ***GP-PRO/PBIII Operation Manual***

3 Select GP and PLC types

Using the input areas provided, select the GP and the PLC types to be used.
Reference ***GP-PRO/PBIII Operation Manual***

4 Create Screen/ Run Screen Setup

Setup the screen and tags in your screen editing software according to your Screen Design.
Reference ***GP-PRO/PBIII Operation Manual*** *and* ***Tag Reference Manual***

5 Transfer Screen Data

Transfer the data from the Screen design software on your PC to the GP unit using the Downloading Cable. Reference ***GP-PRO/PBIII Operation Manual***

6 GP/Host Connection

Set up the GP so that it can receive data from the Host (PLC). Reference *Chapter 4-3, "Initialize", and* ***PLC Connection Manual***

7 Operate the GP

Link the GP with the host (PLC) using the Connection Cable (different cables may be necessary for different hosts), and then run the unit.
Reference ***PLC Connection Manual***

1.2 System Design

The diagrams on the following pages illustrate the peripheral equipment available for the GP unit.

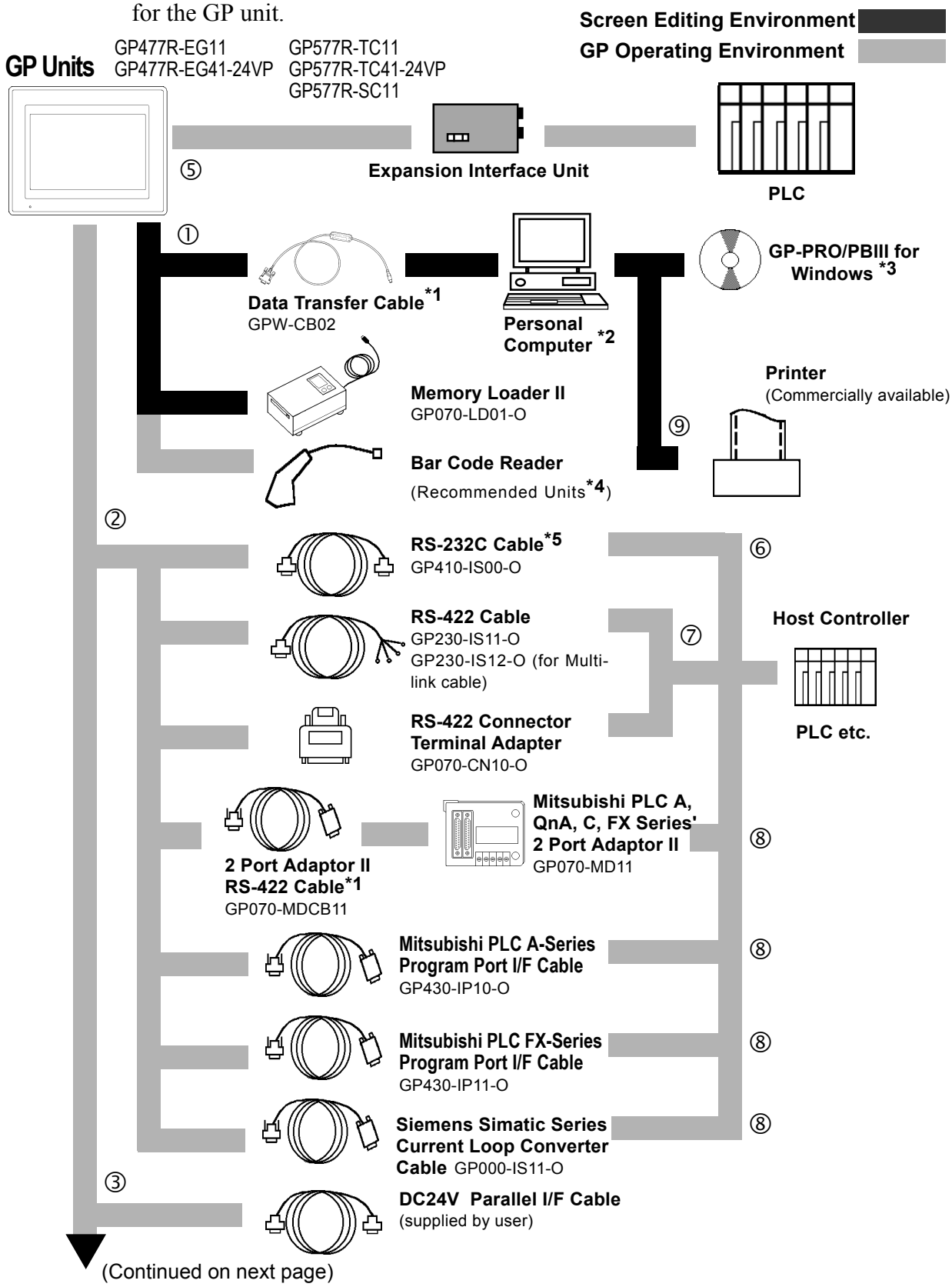

(Continued on next page)

(From previous page)

Printer (Commerciall available)*6
NEC PR Series
EPSON ESC/P24-84 or equivalent
HP LaserJet PCL4 or compatible

Optional Parts (Sold separately)

GP Model	Cover (Protection) Sheet	
	Soft type	Hard type
GP-477R Series	GP470/477-COVER-10P	GP470/477-DF10
GP-577R Series	GP570/577-COVER-10P	GP570/577-DF10

Maintenance Parts: The following parts are included with your GP. They are also sold separately as maintenance parts.

GP Model	Backlight Bulb
GP-577RT	GP577RT-BL00-MS
GP-577RS	GP577RS-BL00-MS

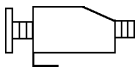

GP Model	Installation Fasteners
All GP 70 Series Units	GP070-AT00-MS

GP Model	Installation Gasket
GP-477R Series	GP470-WP10-MS
GP-577R Series	GP570-WP10-MS

GP Interfaces
① Tool Connector
② Serial Interface
③ AUX Interface
④ Printer Interface
⑤ Expansion Slot (Attached to GP)

PLC Interfaces
⑥ RS-232C Port
⑦ RS-422 Port
⑧ Programming Port

Personal Computer Interfaces
⑨ Printer Interface

***1** *GP-CB-SET can also be used.*

***2** *For range of compatible PCs refer to the following manual.*

Reference ***Operation Manual***

***3** *GP-PRO/PBIII for Windows Ver. 3.0 or later*

***4** *Recommended Units:*

Aimex Corporation	OPT Electronics			Tohken	
BR-331 PC2 (Pen type)	Reading Width	Touch Scanner Type	Keyboard Connection Type	Reading Width	Touch Scanner Type
	60mm	OPT-1125-WL 98	OPT-1125-WD 98	65mm	TCD-5510M
	80mm	OPT-5125-WL 98	OPT-5125-WD 98	82mm	TCD-5510L
	100mm	LT-2125-WL 98	LT-2125-WD 98	105mm	TCD-5510W

***5** *Certain types and models of PLCs cannot be connected.*

Reference ***PLC Connection Manual***

***6** *Compatible with NECPC-PR201/PL , EPSON ESC/P24-J84(C), HP Laser Jet PCL 4 command Converters.Printers designed solely for Windows may not be used. Be sure your printer can run under MS-DOS, which supports the ESC/P or NEC-PR codes.*

1.3 Optional Equipment

All optional equipment listed below is produced by the Digital Electronics Co.

	ITEM	DESCRIPTION
Software	GP-PRO/PBIII for Windows *1 (GPW-PB01J-V* <CD-ROM>	Screen creation software for GP units
Tool Connector	Data Transfer Cable Set *2 (GPW-CB02)	**Data Transfer Cable** Connects your PC to the GP, allowing screen data to be transferred between the two.
	Memory Loader II (GP070-LD01-O)	Copies data at high speed from one GP to another. (Both system program and screen data)
Serial Interface Cables/Units	RS-232C Cable (GP410-IS00-O)*3	I/F cable to connect GP to the Host (PLC).
	RS-422 Cable (GP230-IS11-O)	
	Multi-link Cable (GP230-IS12-O)	Allows multi-link **(n:1)** SIO between the Host (PLC) and the GP. Standard RS-422 interface cable.
	RS-422 Terminal Adapter (GP070-CN10-O)	Adapter for converting output from a serial interface to RS-422 I/F.
	Mitsubishi A Series Programming Port I/F cable (GP430-IP10-O)	Connects directly to Mitsubishi's FX Series I/F Programming Console. Conversion link unit not necessary. Simultaneous use of program console, however, is not possible.
	Mitsubishi PLC FX Series Programming Port I/F Cable (GP430-IP11-O)	
	Mitsubishi PLC A, QnA, C, FX Series 2 Port Adapter (GP030-MD11)	Interface unit that allows use of both GP and Mitsubishi A, QnA, C, FX series equipment in the same location.
	2 Port Adapter II (GP070-MD11)	Interface unit that allows simultaneous use of GP series units and Mitsubishi A, QnA, C, FX series peripherals.
	2 Port Adapter II Cable (GP070-MDCB11)	Cable to connect 2 Port Adapter II with Mitsubishi A, QnA, C, FX series units.
	Siemens Simatic Series Current Loop Converter Cable (GP000-IS11-O)	TTY converter cable for Siemens Simatic S5 Series PLCs. Simultaneous use of program console is not possible.

**1 Use GP-PRO/PBIII for Windows Ver. 2.1 or higher.*

****2** GPW-CB-SET can also be used.*

****3** For detailed information about range of connectable PLCs.*

Reference ***PLC Connection Manual.***

	ITEM	DESCRIPTION
GP Expansion Interface Units	T -Link Unit (GP450-ZB21)	Interface (I/F) Unit to connect the GP to a Fuji Electric Co.'s T-Link Unit.
	JPCN/1 Unit *1 (GP070-JC11)	Interface (I/F) Unit to connect the GP to an JPCN/1 Network.
	GP Ethernet Units (GP070-ET11 & 41)	Interface (I/F) Unit to connect the GP to an Ethernet Network.
	Profibus Unit (GP070-PF11)	Interface (I/F) Unit to connect the GP to a Profibus-type Network.
	CC-Link Unit (GP070-CL11)	Interface (I/F) Unit to connect the GP to a CC-Link installation.
	Multi Unit S (GP077-MLTS11)	Interface (I/F) Unit for use with CF cards. Provides method for output of sound file data.
Optional Items	Cover Sheets **GP-470/477R Series** (GP470/477R-COVER-10P) (GP470/477-DF10) **GP-570/577R Series** (GP570/577R-COVER-10P) (GP570/577-DF10)	Disposable sheets provide protection from a variety of elements. The GP's touch panel can be used with this cover sheet attached. (5 sheets/set)
Maintenance Items	Backlight Bulbs **GP-577RT** (GP577RT-BL00-MS) **GP-577RS** (GP577RS-BL00-MS)	Replacement backlight bulbs for GP series units.
	Installation Fasteners (GP070-AT00-MS)	Fasteners to attach GP to a metal panel.
	Installation Gasket **GP-477R Series** (GP470-WP10-MS) **GP-577R Series** (GP570-WP10-MS)	Used when installing the GP to provide a moisture resistant seal. Same as the seal included in the GP's original equipment package.

1 Requires Japanese OS to be used with GP-PRO/PBIII for Windows Ver. 2.1 or later.

MEMO

Chapter 2

Specifications

1. General Specifications
2. Features and Performance
3. Interface Specifications
4. Names and Functions of GP Parts
5. Graphic Panel Dimensions

2.1 General Specifications

1. Electrical Specifications

Note: **Depending on the type of GP used, the electrical specifications can vary. Therefore, always confirm that the electrical specifications used are correct.**

■ **GP477R-EG11, 577R-TC11, 577R-SC11**

	GP477R-EG11	GP577R-TC11	GP577R-SC11
Rated Power Supply	AC 85V~ 132V 50/60 Hz		
Power Consumption	50 VA or less		
Allowable Pause Duration	20ms or less		
Voltage Endurance	AC1500V—20mA 1minute (between the live wire and grounding terminals)		
Insulation Resistance	DC500V—above 10MΩ (between the live wire and grounding terminals)		

■ **GP477R-EG41-24VP, 577R-TC41-24VP**

	GP477R-EG41-24VP	GP577R-TC41-24VP
Rated Power Supply	DC24V±20%	
Power Consumption	50W or less (TYP 20W)	
Allowable Pause Duration	20ms or less	
Voltage Endurance	AC1000V—10mA 1minute (between the live wire and grounding terminals)	
Insulation Resistance	DC500V—above 10MΩ (between the live wire and grounding terminals)	

2. Environmental Specifications

	GP477R-EG11 GP477R-EG41-24VP	GP577R-TC11 GP577R-TC41-24VP	GP577R-SC11
Ambient Operating Temperature	0 to 50 degrees Celsius	0 to 40 degrees Celsius	
Ambient Storage Temperature	-10 to 60 degrees Celsius		
Operating Humidity	20 to 85%RH (non-condensing)	30 to 85%RH (non-condensing)	
Vibration Resistancee	10 to 25 Hz (X, Y, Z directions 30 minute each 2G)		
Noise Immunity (via noise simulator)	Noise voltage: 1200 Vp-p (1000 Vp-p for GP477R-EG41-24VP and GP577R-TC41-24VP)		
	Pulse length: 1 microsecond		
	Arise time (rise/fall): 1 nanosecond		
Operating Atmosphere	Must be free of corrosive gasses		
Grounding	100 Ω or less grounding resistance		
Rating *1	Equivalent to IP65f (JEM 1030) and NEMA #250 TYPE4X/12		

3. Structural Specifications

	GP477R-EG11 GP477R-EG41-24VP	GP577R-TC11 GP577R-TC41-24VP	GP577R-SC11
External Dimensions (mm)	274W x 216H x 56.5D mm (GP unit only)	317W x 243H x 85D mm (GP unit only)	
Weight	Under 2.5 kg (GP unit only)	Under 3.5 kg (GP unit only)	
Cooling Method	Natural air circulation		

1 The front face of the GP unit, installed in a solid panel, has been tested using conditions equivalent to the standards shown in the specification . Even though the GP unit's level of resistance is equivalent to these standards, oils that should have no effect on the GP can possibly harm the unit. This can occur in areas where either vaporized oils are present, or where low viscosity cutting oils are allowed to adhere to the unit for long periods of time. If the GP's front face protection sheet becomes peeled off, these conditions can lead to the ingress of oil into the GP and separate protection measures are suggested. Also, if non-approved oils are present, it may cause deformation or corrosion of the front panel's plastic cover. Therefore, prior to installing the GP be sure to confirm the type of conditions that will be present in the GP's operating environment. If the installation gasket is used for a long period of time, or if the unit and its gasket are removed from the panel, the original level of the protection cannot be guaranteed. To maintain the original protection level, you need to replace the installation gasket regularly.

2.2 Features and Performance

1. Display Features

		GP477R-EG11 GP477R-EG41-24VP	GP577R-TC11 GP577R-TC41-24VP	GP577R-SC11
Display Medium		High Intensity EL Display	TFT type color LCD	STN type color LCD
Display Color		Amber (monochrome)	64 colors (RGB-4 levels)	64 colors *1
Backlight			CCFL (lifespan = 40,000 hours)	CCFL (lifespan = 25,000 hours)
Resolution		640 x 400 pixels	640 x 480 pixels	
Display Area		192W x 120H	211.2W x 158.4H	
Attributes		Blink/Reverse Video		
Brightness		Two levels available via touch panel.	Four levels of adjustment available via touch panel.	
Contrast				8 levels available
Character Sets		Korean: (KSC5601 - 1992 codes) Hangul fonts (including Kanji)		
		Chinese: (GB2321-80 codes) simplified Chinese fonts		
		Taiwanese: (Big 5 codes) traditional Chinese fonts		
		ASCII: (Code Page850) Alphanumeric (incl. European fonts)		
		Japanese: ANK 158 type, Kanji:6962 (Standard JIS Type 1 & 2)		
No. of Char. Disp.	8x8 dots	80 Char./row, 50 rows	80 Char. per row, 60 rows	
	8x16 dots	80 Char./row, 25 rows	80 Char. per row, 30 rows	
	16x16 dots	40 Char./row, 25 rows	40 Char. Per row, 30 rows	
Character Size		Both height and width can be expanded 1, 2, 4, or 8 times. Chinese characters larger than 2 times size (32 x 32) can be displayed in a high quality font.		

1 With the GP577R-SC11, when more than the standard 8 colors are used for display, flickering may occur.

2. Screen Memory

	GP477R-EG11 GP477R-EG41-24VP	GP577R-TC11 GP577R-TC41-24VP	GP577R-SC11
Internal Memory	FLASH EPROM 2M bytes (approx. 640 screens assuming 3.2K bytes/screen)		
Backup Memory	SRAM 96K bytes Backup Memory uses lithium batteries. *1		

3. Touch Panel / Clock Accuracy

	GP477R-EG11 GP477R-EG41-24VP	GP577R-TC11 GP577R-TC41-24VP	GP577R-SC11
Touch Panel	32 x 20 keys/ screen (1 or 2 point touch)	32 x 24 keys/ screen (1 or 2 point touch)	
Clock Accuracy	± 65 seconds/ month (at room temperature)		

**1 The battery life of the GP-477R/577R's lithium battery, when the battery is 40°C or less is over 10 years. At 50°C or less it is over 4.1 years, and at 60°C or less it is more than 1.5 years.*

Note:

- **The GP's internal clock has a slight error. At normal operating temperatures and conditions, with the GP operating from its lithium battery, the degree of error is 65 seconds per month. Variations in operating conditions and battery life can cause this error to vary from +90 to -380 seconds per month. For systems where this degree of error will be a problem, the user should be sure to monitor this error and make adjustments when required.**
- **To input the correct time into the System Data Area's time settings, use the GP's OFFLINE mode. (Date information can be entered as well)**

4. External Interfaces

	GP477R-EG11 GP477R-EG41-24VP	GP577R-TC11 GP577R-TC41-24VP	GP577R-SC11
Serial Interface	Asynchronous RS232C/RS422 (Supports various Data Length: 7 or 8 Stop Bit: 1 or 2 bits Parity: None, Odd or Data Transmission		
Auxiliary	Touch Switch Output System Alarm Buzzer Output: RUN Output: DC24V Remote Reset Input:		
Printer Output	Conforms to Centronix standards. Compatible for NECPC-PR201/PL, EPSON ESC/P24-J84(C), HP Laser Jet PCL4 Command Converters. Dedicated Windows (95,98, NT) printers cannot be used. Be sure when selecting a printer that the unit supports the HP LaserJet PCL, NEC PR Series, EPSON ESC/P24-J84 or equivalent protocol. Certain printers containing both Windows and DOS printer drivers may be used. Please contact your local GP distributor for details.		
Tool Connector	Synchronous TTL level nonprocedure command I/F <When developed> Used for downloading from the GP application soft. <When operated> Used as a bar code reader's interface		

2.3 Interface Specifications

1. Printer Interface

Pin Connection	Pin #	Signal Name
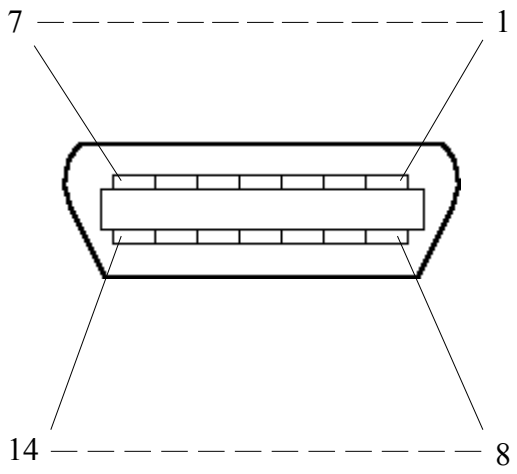	1	$\overline{\text{PSTB}}$
	2	PDB0
	3	PDB1
	4	PDB2
	5	PDB3
	6	PDB4
	7	PDB5
	8	PDB6
	9	PDB7
	10*1	$\overline{\text{INIT}}$
	11	BUSY
	12	Reserved
	13	Reserved
	14	GND

***1** *When the $\overline{\text{INIT}}$ signal is not used, no.10 pin does not need to be connected.*

When a cable other than Digital's recommended cable is used, pin no. 10 may or may not be connected.

Recommended Connector : FCN-787P014-G/R (made by Fujitsu, Inc.)

Recommended Cover : FCN-780C014-D/E (made by Fujitsu, Inc.)

Important ***Do not connect pins 12 and 13 to anything.***

2. AUX I/F (Input/ Output)

Pin Connection	Pin #	Signal Name	Contents
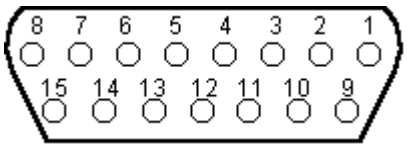	1	TSW0	Touch Switch Output (8 bit)
	2	TSW1	
	3	TSW2	
	4	TSW3	
	5	TSW4	
	6	TSW5	
	7	TSW6	
	8	TSW7	
	9	RUN	Output On in the middle of operations, Off during Power interuption or in standby mode *1
	10	ALARM	Alarm Output: when On, enables GP unit alarm.*1
	11	BUZZ	Buzzer Output
	12	DC24V	Output--Common (DC24V)
	13	AIN - C	Input--Common (DC24V)
	14	AOUT - C	Output--Common (GND)
	15	RESET	Reset Input

***1** *AUX Input/Output I/F's pin no.10 Alarm*
The AUX Alarm will occur in the following two cases:

- *Hardware Alarm (SCREEN MEMORY CHECKSUM ERROR)*
- *Software Alarm (SYSTEM ERROR, i.e., incorrect data that makes screen operation impossible)*

Dsub15 pin Plug : XM2A-1501 (made by Omron Corp.)
Dsub15 pin Cover: XM2S-1511 (made by Omron Corp.)
Screws: XM2Z-0071 (made by Omron Corp.)

Note: **Use rough metric type M2.6x0.45p threads used to hold the cable's set (fastening) screws in place.**

■ Input Circuit

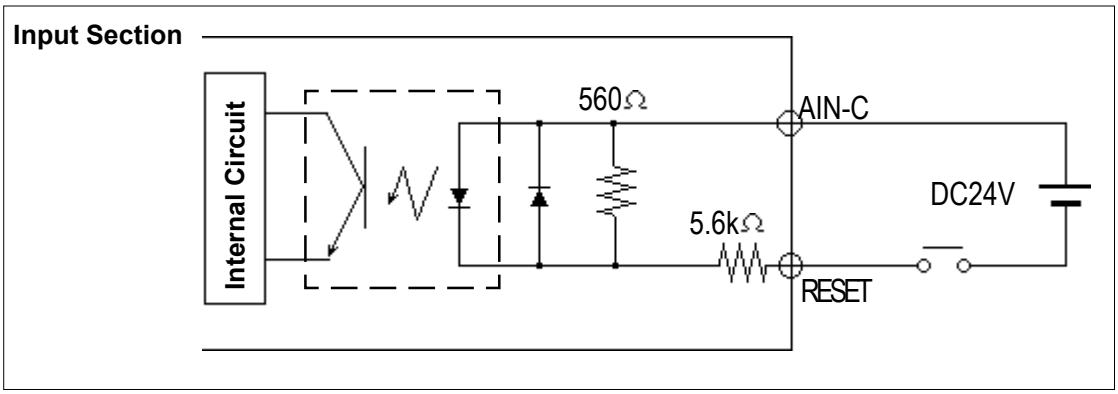

Input Voltage	DC 24V +/- 10%	**Operating Voltage**	ON Voltage min. DC 21.1V OFF Voltage max. DC 3V
Input Current	4mA/DC 24V (TYP)	**Termination Type**	Photo-Coupler Terminator
Min. Input Pulse Width	2ms		

■ Output Circuit

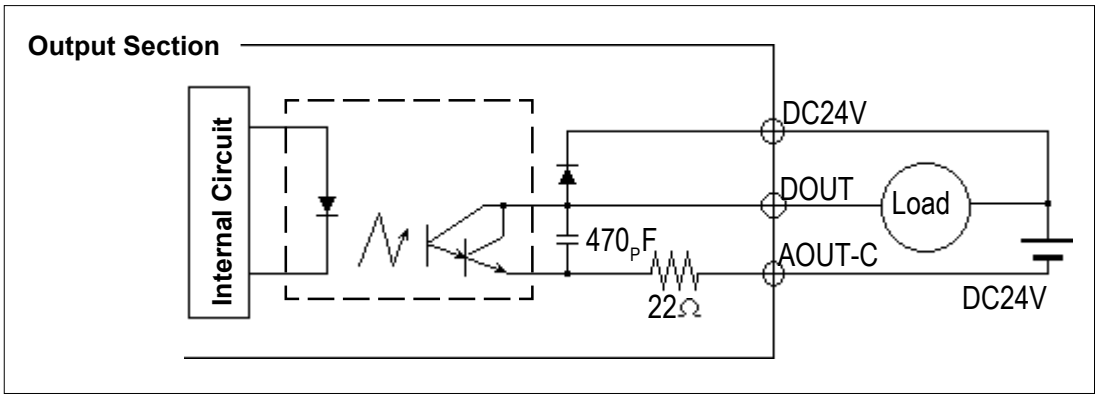

* DOUT = TSW0 to TSW7, RUN, ALARM, BUZZ.

Maximum Load Circuit **50mA / point**
Regulated Load Voltage **DC24V (TYP)**

The relationship between the Load Voltage and the Load Current is as illustrated below:

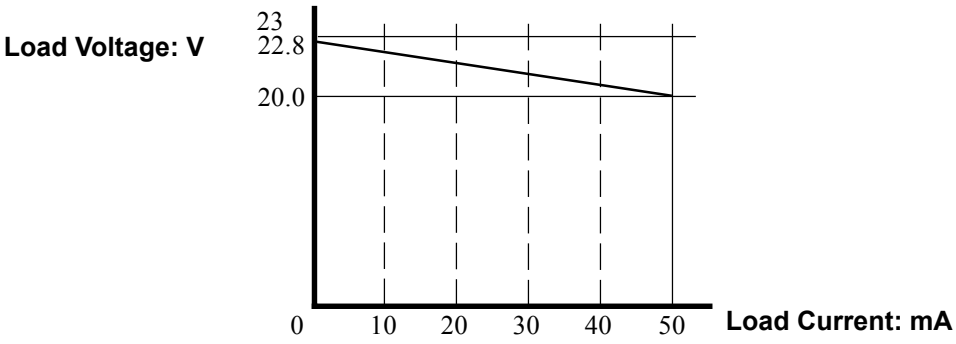

3. Serial Interface

Pin Connection	Pin #	Signal Name	Condition
SIO 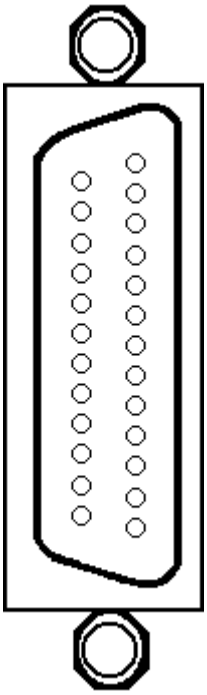	1	FG	Frame ground
	2	SD	Transmit Data (RS-232C)
	3	RD	Receive Data (RS-232C)
	4	RS	Request To Send (RS-232C)
	5	CS	Clear To Send (RS-232C)
	6	NC	Not Connected
	7	SG	Signal Ground
	8	CD	Carrier Detect (RS-232C)
	9	TRMX	Termination (RS-422)
	10	RDA	Receive Data A(RS-422)
	11	SDA	Transmit Data A (RS-422)
	12	NC	Not Connected
	13	NC	Not Connected
	14	VCC	5V±0.5 output 0.25A
	15	SDB	Transmit Data B (RS-422)
	16	RDB	Receive Data B (RS-422)
	17	NC	Not Connected
	18	CSB	Clear To Send B (RS-422)
	19	ERB	Enable To Receive B (RS-422)
	20	ER	Enable To Receive (RS-232C)
	21	CSA	Clear To Send A (RS-422)
	22	ERA	Enable To Receive A (RS-422)
	23	RESERVED	Reserved For Future Use
	24	NC	Not Connected
	25	RESERVED	Reserved For Future Use

Recommended Connector: *Dsub25pin plug XM2A-2501<made by OMRON Corp.>*
Recommended Cover : *Dsub25pin cover XM2S-2511<made by OMRON Corp.>*
Jack Screws XM2Z-0071<made by OMRON Corp.>

Note: **Use rough metric type M2.6x0.45p threads used to secure the cable's set screws.**

Recommended Cable: *CO-MA-VV-SB5Px 28AWG <made by HITACHI Cable Ltd.>*

To determine your PLC's connection: Reference ***PLC Connection Manual***

When creating your own cable, follow the instructions listed below:

For RS-422

(The following pairs of pin #'s must be connected to each other)

#18 (CSB) <—> #19 (ERB)

#21 (CSA) <—> #22 (ERA)

- ***When connecting the RS-422 cable and the #9 (TRMX) and #10 (RDA) points, a termination resistance of 100W added between RDA and RDB.***
- ***When making a cable and using a Memory Link type connection, be sure to create a 4-wire System.***

For RS-232C

- ***Do not use the following pins: 9 (TRMX), 10 (RDA), 11 (SDA), 15 (SDB), 16 (RDB), 18 (CSB), 19 (ERB), 21 (CSA), 22 (ERA).***

Important

- ***Since Pin#14(VCC) is unprotected, be sure to keep the output current in the rated range.***
- ***Be sure to connect this unit's SG/GND (Signal Ground) terminal to the other unit's Signal Ground Terminal.***

2.4 Names and Functions of GP Parts

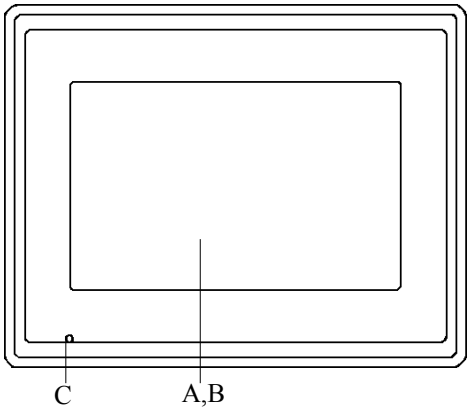

GP-477R Series Unit

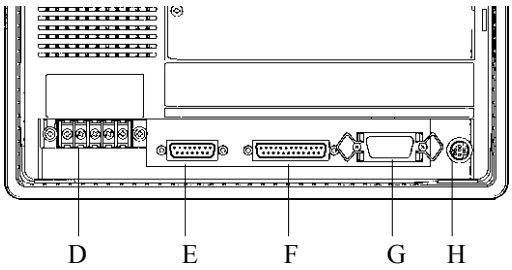

GP-577R Series Unit

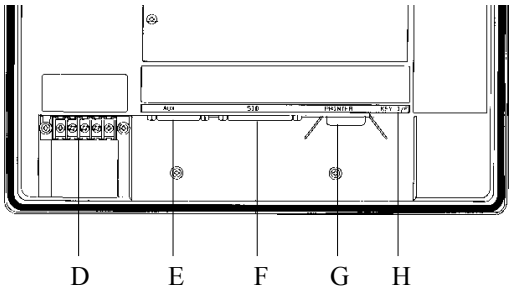

A: Display Panel

The GP monitor screen displays the screen setup and corresponding PLC host data.

GP-477RE	High Intensity EL Display
GP-577RT	TFT type Color LCD
GP-577RS	STN type Color LCD

B: Touch Panel (overlaid on top)

Runs any screen change operations and sends data to the PLC.

C: Power Lamp

Lights when the power cord is connected. (Green LED)

D: Power Input Terminal Block

The input and ground terminals for the AC power cable.

E: Auxilary Input/Output (AUX)

Operates the Touch Switch, System Alarm, Buzzer, and RUN output signals, and Remote Reset input signals.

F: Serial Interface

Used for the RS-232C and RS-422 (Serial) cables. Is connected to the Host (PLC).

G: Printer Interface

The Printer is connected here.

H: Tool Connector

The Data Transfer cable, Bar Code Reader or Memory Loader can be connected here.

2.5 Graphic Panel Dimensions

1. GP-477R Series - External Dimensions

Note: For detailed dimension information, please contact your local PL distributor.

Unit: mm

Top View

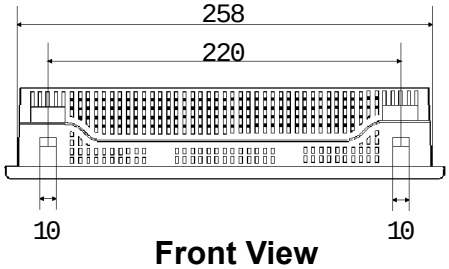

Front View

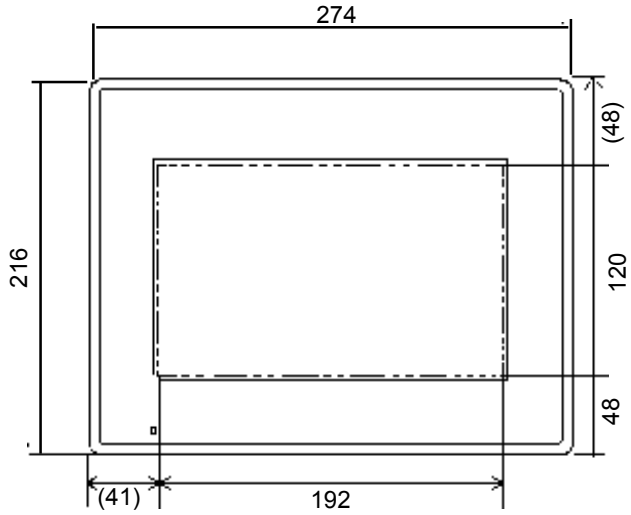

Side View

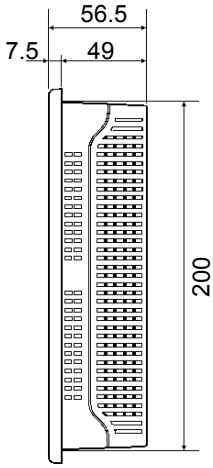

Rear View

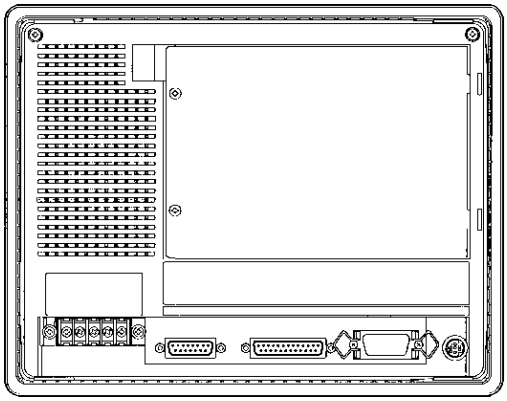

2. GP-577R Series - External Dimensions

Note: For detailed dimension information, please contact your local PL distributor.

Unit: mm

Top View

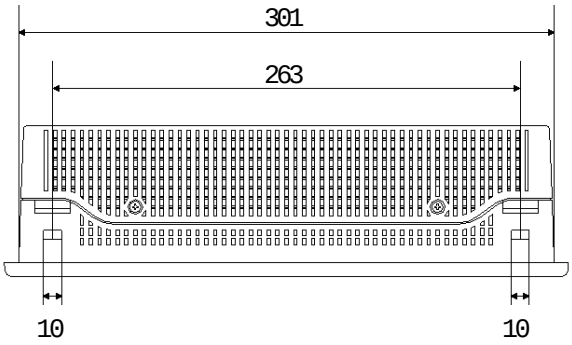

Front View

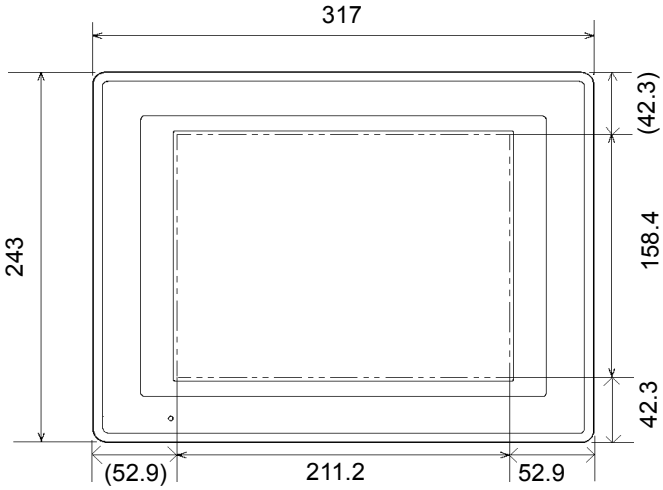

Side View

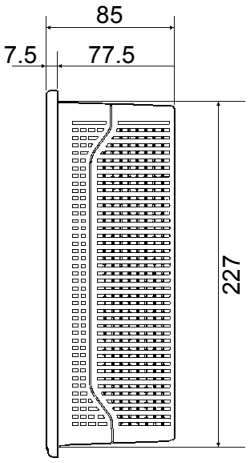

Rear View

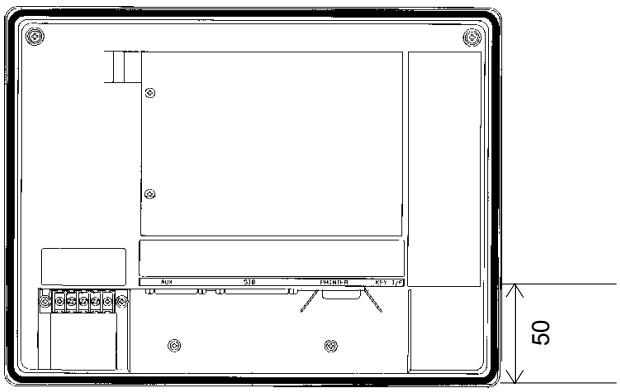

3. Installation Fasteners

Unit: mm (in.)

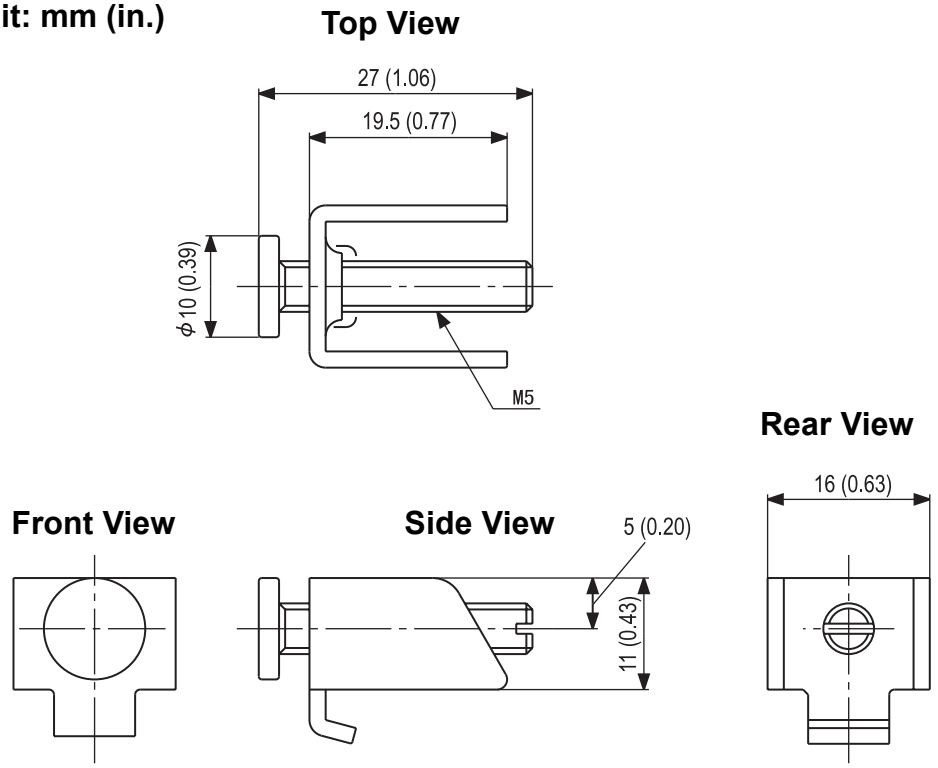

4. GP Installation Mounting Hole Dimensions

Unit: mm

■ Installation Mounting Hole

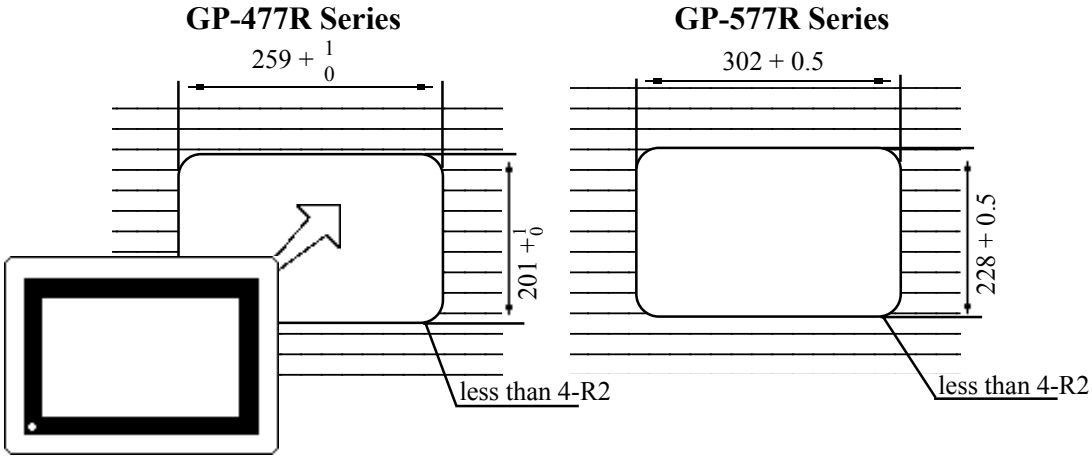

Chapter 3

Installation and Wiring

1. Installation
2. Wiring Cautions
3. Connecting the Printer Cable
4. GP Tool Connector

3.1 Installation

Follow the steps given below when installing the GP unit.

■ Confirm the Installation Gasket's Seating

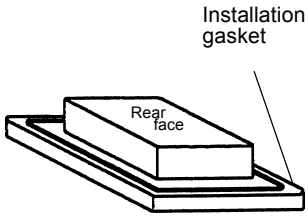

It is strongly recommended that you use the gasket.

Place the GP on a level surface with the display panel facing downward. Check that the GP's installation gasket is seated securely into the gasket's groove, which runs around the perimeter of the panel's frame.

For details about installing the gasket, refer to

Reference *7.1.2 Installation Gasket Replacement*

Important ***Before installing the GP into a cabinet or panel, check that the installation gasket is securely attached to the unit.***

1. Creating an Installation Opening

Create the correct sized opening required to install the GP, using the installation dimensions given.

Reference *2.5.4 "GP Installation Mounting Hole Dimensions"*

The mositure resistant gasket, installation brackets and attachment screws are all required when installing the GP.

Note:

- **Check that the panel or cabinet's surface is flat, in good condition, and has no jagged edges.**
- **Panel thickness should be from 1.6mm to 10.0mm.**

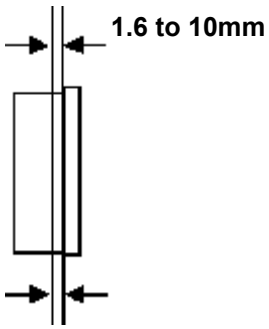

Note: **For easier maintenance and operation, plus better ventilation, ensure the GP unit is mounted at least 100 mm away from adjacent structures and other parts.**

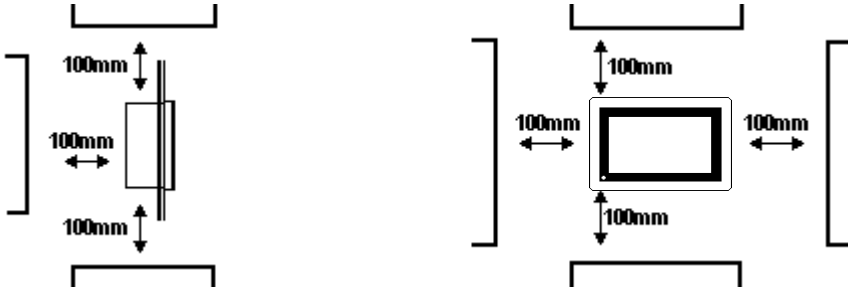

Note: **The GP uses ventilation in its outer shell to naturally cool itself. When installing the unit horizontally or sideways, use a forced air cooling system (i.e. a fan) or lower the surrounding temperature to avoid overheating.**

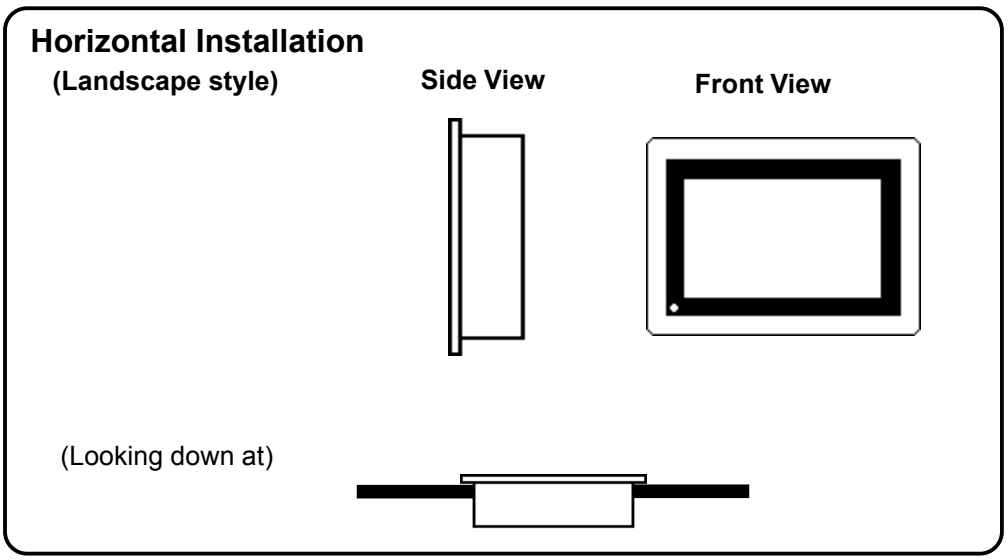

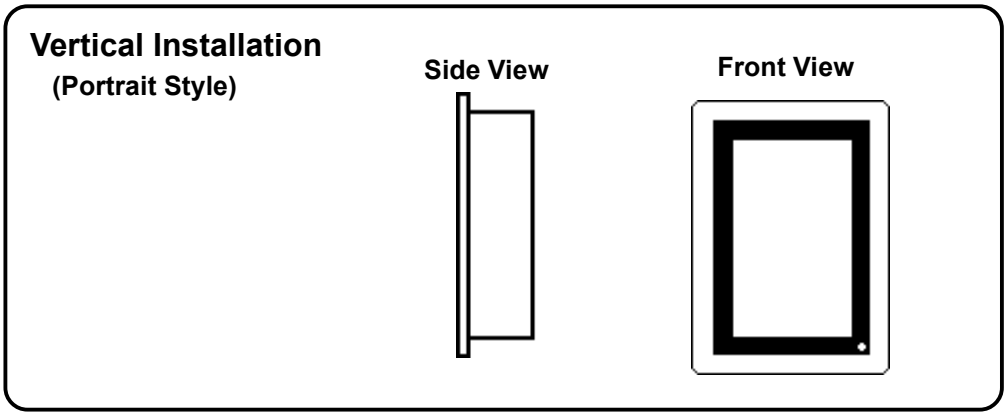

Note:

- **When installing the GP vertically, orient the unit so that the Power Terminal Block points upwards.**
- **Be sure that heat from surrounding equipment does not cause the GP to exceed its standard operating temperature.**
- **Do not use GP-477R Series units in an environment that exceeds 50° C; do not use GP-577R Series in an environment that exceeds 40° C.**
- **Be sure this unit is located as far away as possible from electromagnetic circuits, non-fuse type breakers, and other equipment that can cause arcing.**
- **When installing the GP unit in a slanted panel, the panel face should not incline more than 30°.**

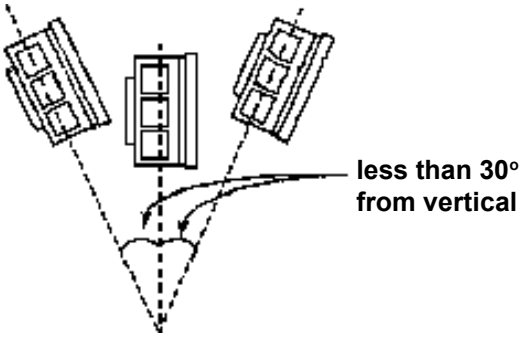

2. Installation Direction

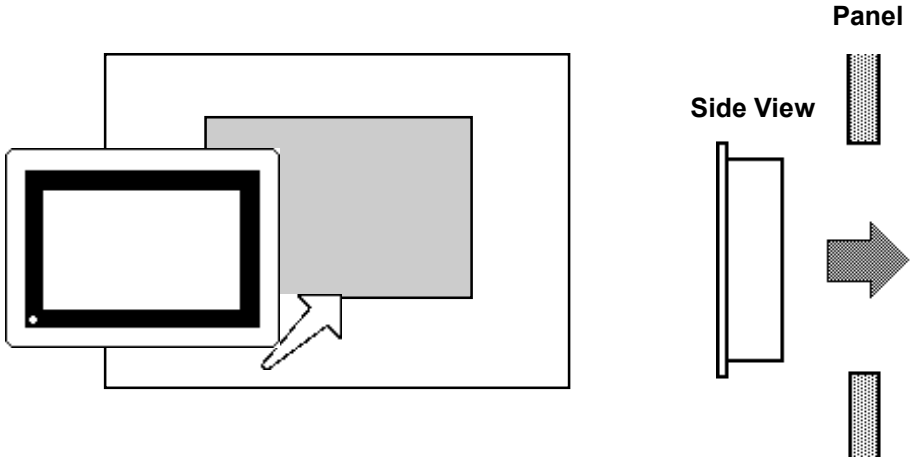

3. Securing the Installation Fasteners

There are four (4) insertion slots on the top and bottom of the GP, where the metal installation fasteners hook on.

①

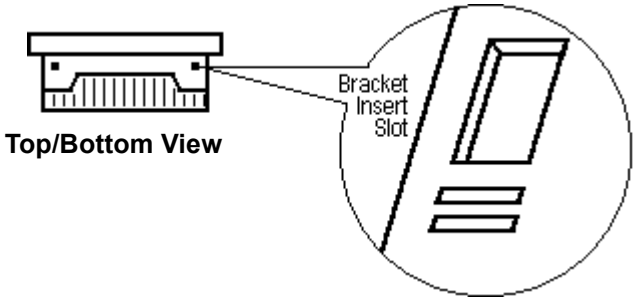

4. Inserting and Tightening the Fasteners

Insert each of the fasteners into its slot as shown below. Be sure to pull the fastener back until it is flush with the rear of the attachment hole.

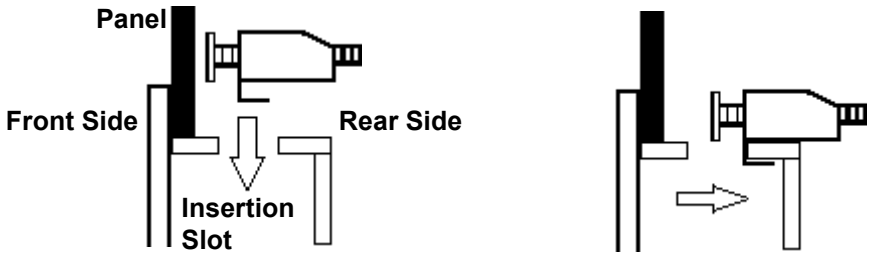

Use a screw driver to tighten the attachment screws and secure the GP unit in place.

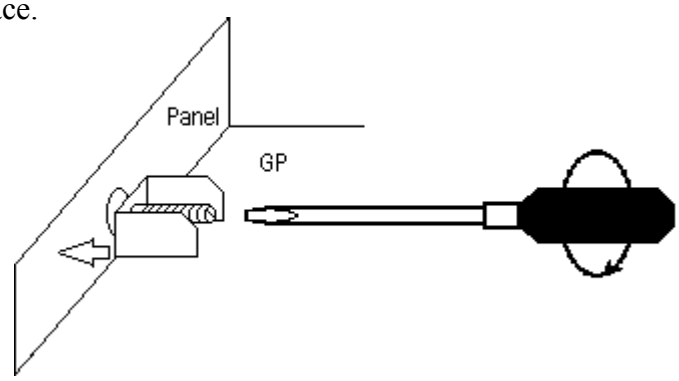

Important

A torque of only 0.5~0.6 N•m is required to tighten an attachment screw. Be careful not to use too much force, since it may damage the GP unit.

3.2 Wiring Cautions

1. Connecting the GP's Power Cable

WARNING

- **To avoid an electric shock, be sure the GP's power cord is unplugged from the main power outlet when connecting the power cord terminals to the GP unit.**
- **The GP477R-EG41-24VP and GP577R-TC41-24VP panels accept DC 24V power only. Using an incorrect power supply can damage both the power supply and the GP.**
- **Be sure to connect a breaker type power switch to the GP's power cord.**
- **When connecting the power cord power terminals to the GP, be sure to ground the FG (⏚) terminal, since there is possibility of an electric shock if the GP malfunctions.**

Important

When the FG terminal is connected, be sure the wire is grounded. Not grounding the GP unit will result in excess noise.

Note:

- **Wherever possible, use thick wires (max 2mm^2) for power terminals, and twist the exposed wire ends when connecting the Ring Terminals.**
- **Please use the following sized Ring Terminals.**

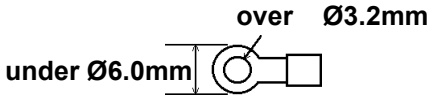

- **To prevent the Ring Terminals from causing a short when the terminal block attachment screws are loosened, be sure to use sleeve-type Ring Terminals.**
- **Do not wire the cable either near or parallel to high voltage or high current power lines.**

For GP477R-EG11, GP577R-TC11, GP577R-SC11 models

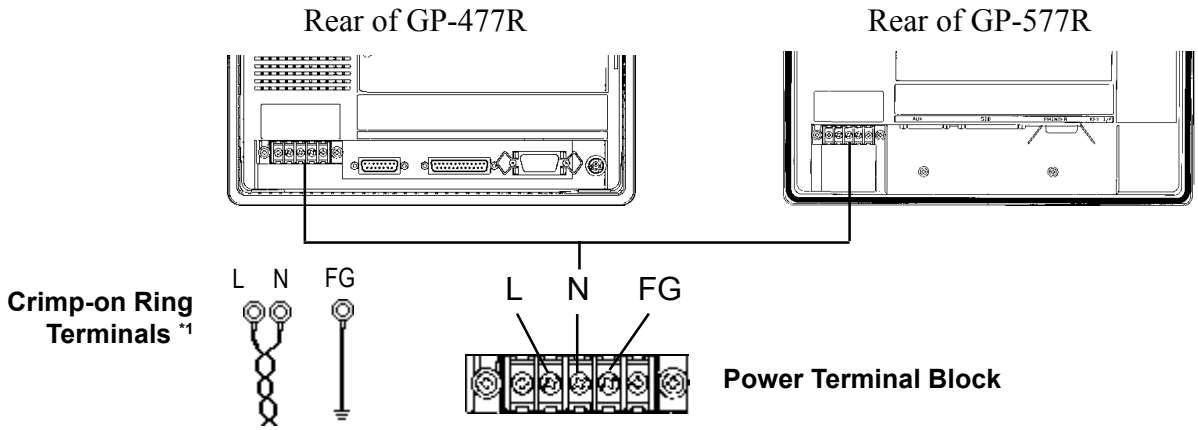

For GP477R-EG41-24VP and GP577R-TC41-24VP models

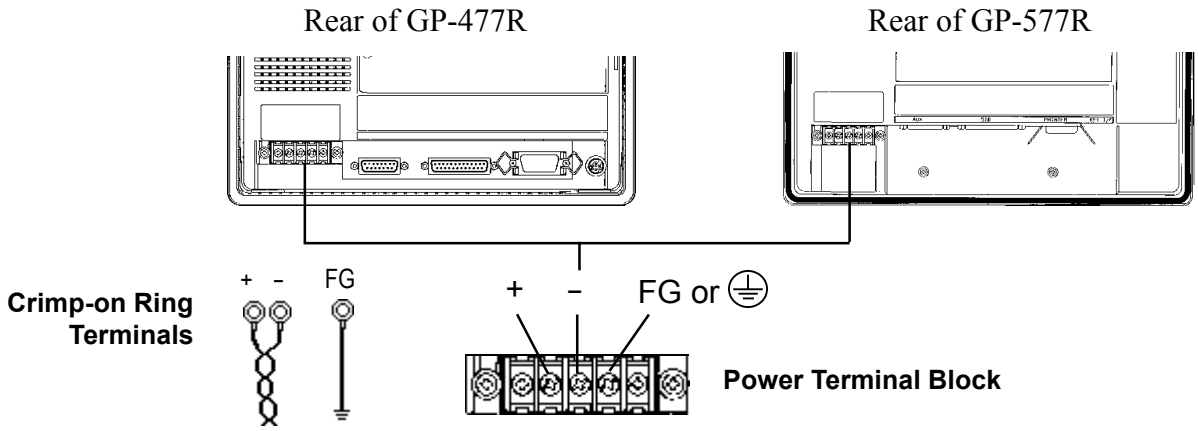

2. Connecting the GP Power Supply Terminals

1) Be sure that the GP's Power Cord is not plugged in to the power supply.
2) Remove the GP Terminal Strip's clear plastic cover.
3) Remove the screws from the 3 middle terminals, position the Ring Terminals as shown above and re-attach the screws. (Check each wire to make sure the connections are correct)

Important ***A torque of only 0.5~0.6 N•m is required to tighten an attachment screw. Be careful not to use too much force, since it may damage the GP unit.***

***1** *The three ring terminals are:*

AC100V L = AC Input Terminal - live line
AC100V N = AC Input Terminal - neutral line
FG = Ground terminal - connected to the GP chassis

Recommended ring terminal: V2-MS3 or equivalent
(Made by JST Corporation)

3. Connecting the GP's Power Supply

When using the GP477R-EG11, GP577R-TC11, 577R-SC11 models, please pay special attention to the following items.

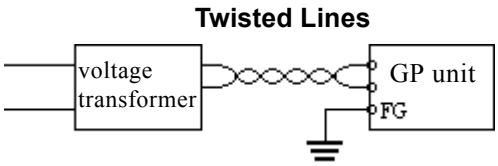

- If the supplied voltage exceeds the GP unit's range, connect a voltage transformer.

Reference *Chapter 2, "**Specifications**", for the allowable voltage range.*

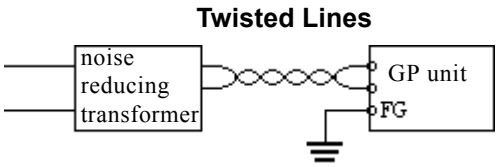

- For between the line and ground, select a power supply that is low in noise. If there is an excess amount of noise, connect a noise reducing transformer.

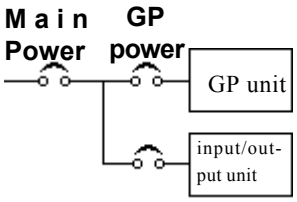

Important **Use Voltage and Noise Reducing transformers with capacities exceeding 100VA.**

- When supplying power to the GP unit, please separate the input/output and operation unit lines as shown in the figure.

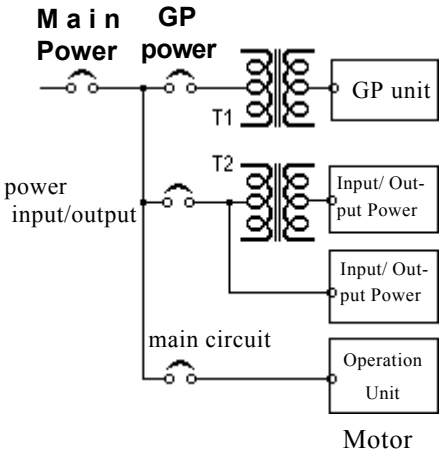

- To increase the noise resistance quality of the power cable, simply twist each power wire before attaching the Ring Terminal.
- The power supply cable must not be bundled or positioned close to main circuit lines (high voltage, high current), or input/output signal lines.

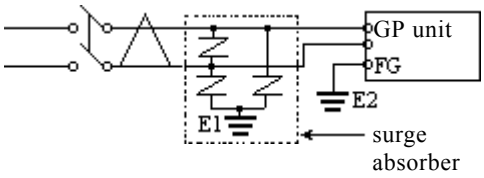

- Connect a surge absorber, as shown in the diagram, to deal with power surges.
- To avoid excess noise, make the power cable as short as possible.

Important

- **Make sure the surge absorber (E1) is grounded separately from the GP unit (E2).**
- **Select a surge absorber that has a maximum circuit voltage greater than that of the peak voltage of the power supply.**

4. Grounding the GP

(a) Exclusive grounding (BEST)

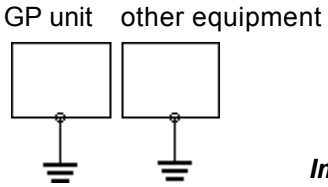

- Connect the FG terminal found at the back of the unit to an exclusive ground. [diagram (a)].

Important

- ***Check that the grounding resistance is less than 100Ω.***
- ***The grounding wire should have a cross sectional area greater than 2mm². Set the connection point as close to the GP unit, and make the wire as short, as possible. When using a long grounding wire, replace the thin wire with a thicker wire placed in a duct.***

(b) Common grounding (OK)

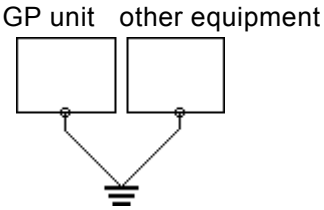

- If exclusive grounding is not possible, use a common connection point. [diagram (b)]

(c) Common grounding (Not OK)

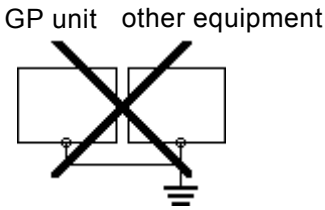

Note:

- **If the equipment does not function properly when grounded, disconnect the ground wire from the FG terminal.**

Caution

Do not place regular electric wires over wires used for earthing the GP, since it can lead to an accident or machine malfunction.

5. Placement of I/O Signal Lines

- Input and output signal lines must be separated from the power control cables for operating circuits.
- If this is not possible, use a shielded cable and connect the shield to the GP's frame.

3.3 Connecting the Printer Cable

The steps to connect a printer to the GP are outlined below.

(A commercially available 14 pin Centronix printer cable is required)

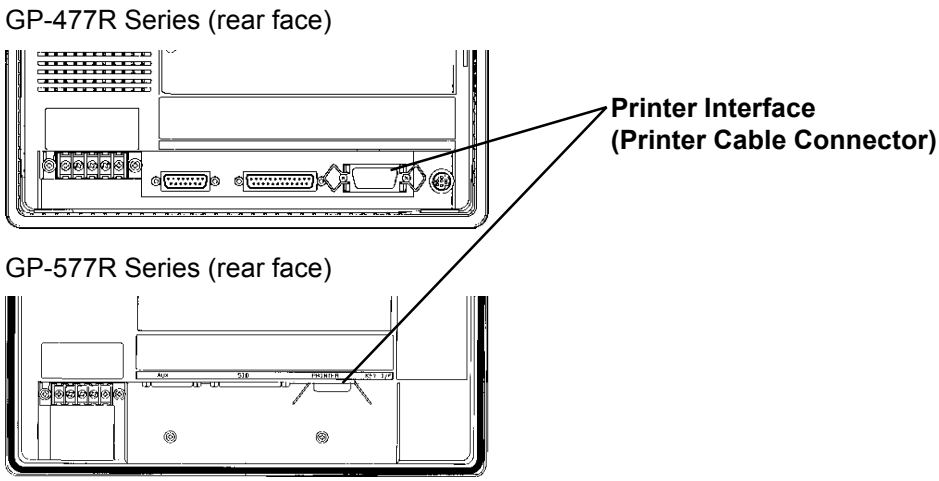

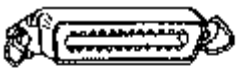

1) Connect the 14 pin end of the cable to the GP.

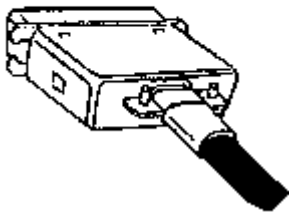

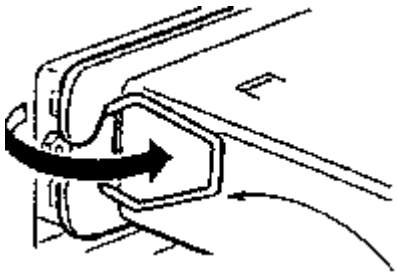

2) Secure the cable by squeezing the connector's two(2) side pinch-clips until they lock into place.

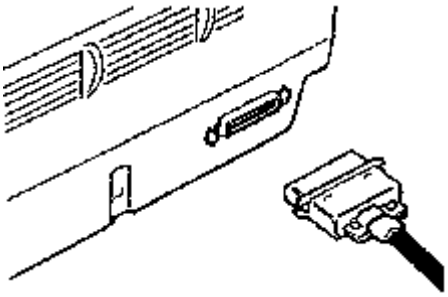

3) Connect the cable to your printer, using the same procedures outlined in steps 1 and 2.

(For the correct printer cable to use with this unit, please contact your nearest Digital representative)

3.4 GP Tool Connector

The GP's Data Transfer Cable, Memory Loader II, or the Bar Code Reader can be attached to the GP's Tool Connector socket.

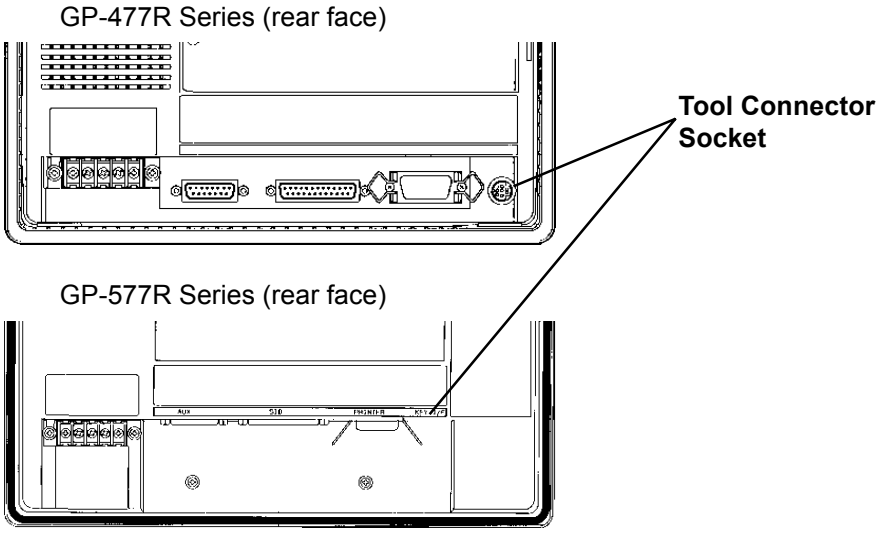

Important

- ***Before unplugging any connector(s) from the back of the GP, be sure the GP's power cable is unplugged from the main power supply.***

- ***When the Bar Code Reader uses a separate power supply:***
  - ***Turn the Bar Code Reader ON before turning the GP ON.***
  - ***Turn the GP OFF before turning the Bar Code Reader OFF.***

Chapter 4

OFFLINE Mode

1. Entering OFFLINE Mode
2. OFFLINE Mode's Main Menu
3. INITIALIZE—Standard Operation
4. SELF-DIAGNOSIS—Standard Operation
5. Transfer Screen Data

4.1 Entering OFFLINE Mode

OFFLINE Mode provides access to the Initialize, Self-Diagnosis, and other features built into the GP. You will need to change the GP to OFFLINE mode before you can use any of these features.

Important

- ***OFFLINE mode is unavailable in a completely new GP until the necessary Screen Data has been transfered from the screen editor software. Be sure the GP's power cord is plugged in and no images are displayed on the GP screen. When data is transferred from your PC to the GP, the necessary System Data will be sent.***

To INITIALIZE the setup or run SELF-DIAGNOSIS in the GP unit, transferring to the OFFLINE mode becomes necessary. There are two ways to enter OFFLINE mode; first, immediately after plugging in the GP's power cord, and second, by using the Force Reset feature.

1. When Turning the GP's Power ON

Touch the upper left-hand corner of the GP screen within 10 seconds of plugging in the GP's power cord.

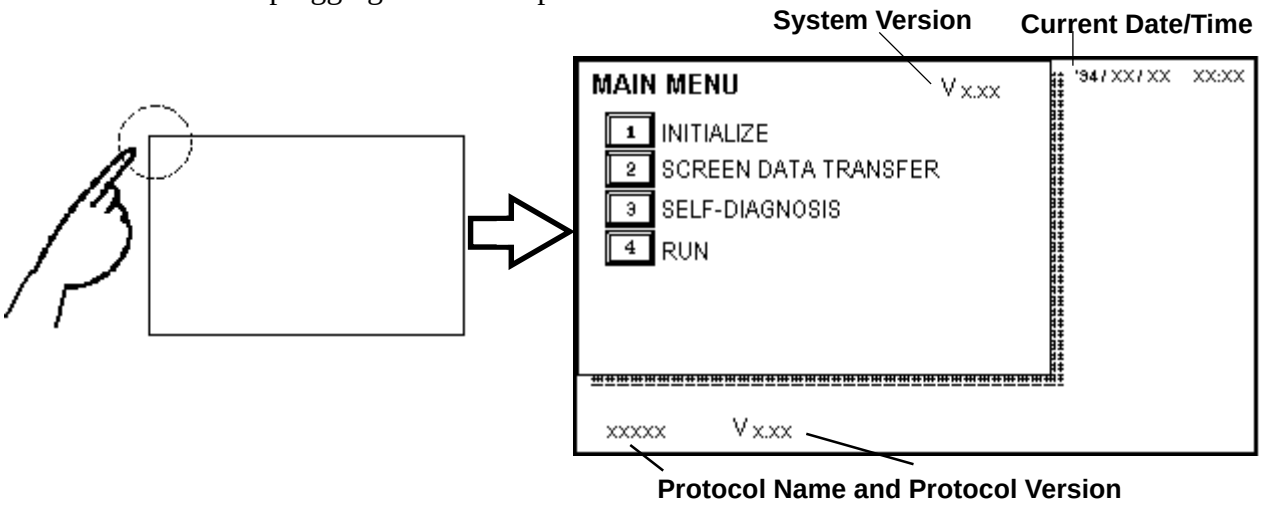

2. From Forced Reset

From the Forced Reset screen, touch the OFFLINE button and the Main Menu will appear.*1

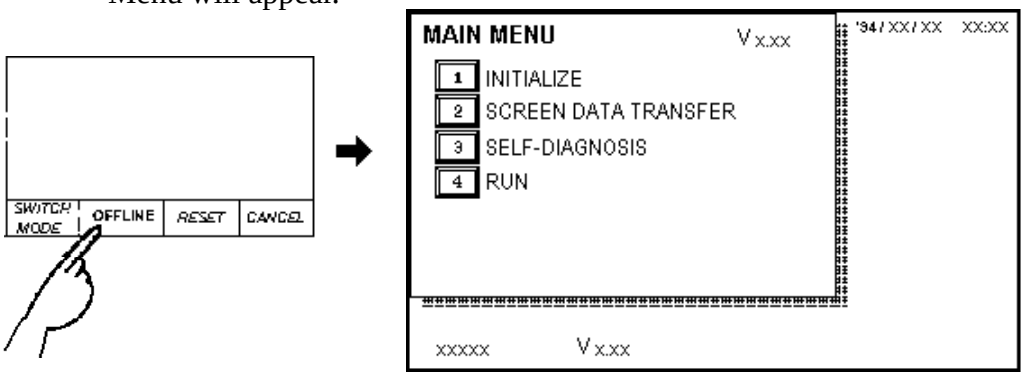

Note:

- **When the GP unit has the Device Monitor function, the following display will appear.*2** Reference ***PLC Connection Manual, Appendix 3 - Device Monitor***

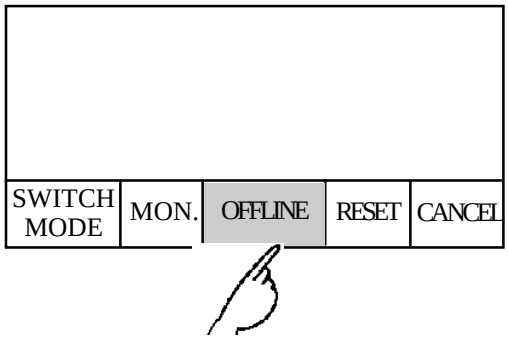

If a Password has been set in INITIALIZE/ SET UP SYSTEM, before entering the OFFLINE mode, the following screen appears.
Enter the password, then touch *Set* to enter OFFLINE mode.

For more information about *Passwords,* Reference ***Chapter 5.3, "SYSTEM ENVIRONMENT SETUP"*** and ***Chapter 4.3, "Inputting Numbers"***

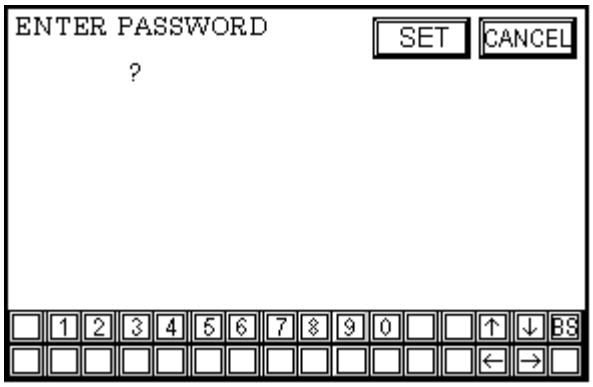

*1 *For instructions on how to enter the Forced Reset Screen*
Reference *5.4.3 "Set Up Touch Panel; FORCE RESET"*

4.2 OFFLINE Mode's Main Menu

Each menu item shown below has different settings that must be set to match the corresponding PLC in order for the GP to communicate properly. Entering OFFLINE mode calls up the following screen.

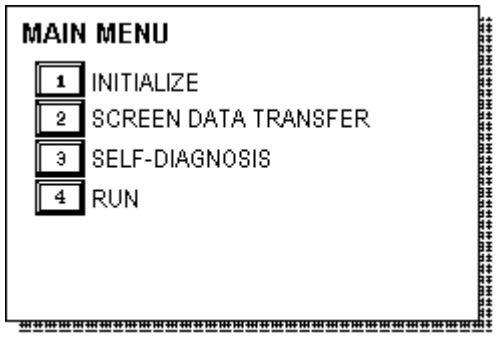

Select the desired menu item by pressing the corresponding number on the screen.
Each Main Menu item is used as follows.

INITIALIZE

The setup items listed in this menu are necessary to run the GP unit.

SCREEN DATA TRANSFER

Select to transfer screen data to and from the screen editing software.

SELF-DIAGNOSIS

Checks to see if there are any problems with the GP System or Interface (I/F).

RUN

Starts GP operation.

Reference *For more information about INITIALIZE, refer to Chapter 5, "Initialize"; for more information about TRANSFER SCREEN DATA, refer to your screen editor software's* **Operation Manual***; for more information about SELF-DIAGNOSIS and RUN, refer to Chapter 6, "GP Run Mode and Errors".*

4.3 INITIALIZE—Standard Operation

■ Selecting A Menu

- Touch the menu number to select it.

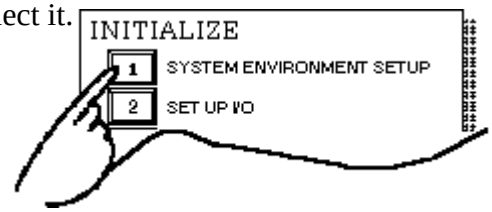

- Touch the menu item directly to select it.

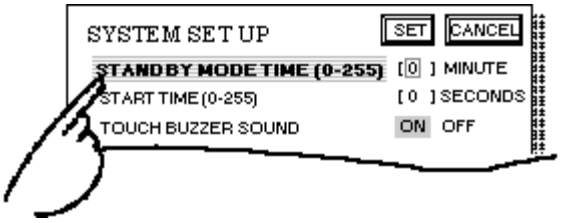

■ Entering Numbers

- After selecting an input field by touching it, use the numeric touch keys located at the bottom of the screen to enter numeric values.

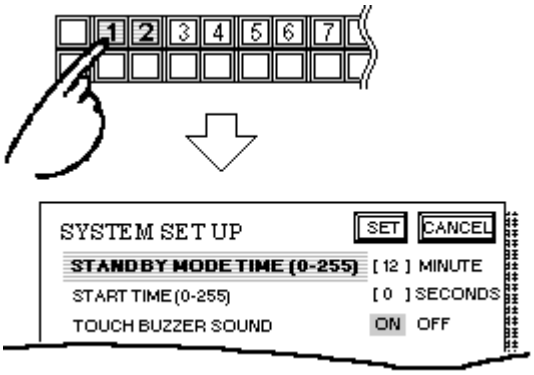

■ Selecting Setup Conditions

- After selecting a menu item and entering that area, touch the option you would like to setup. The selected item becomes highlighted. In this example, the TOUCH BUZZER SOUND has been set Off.

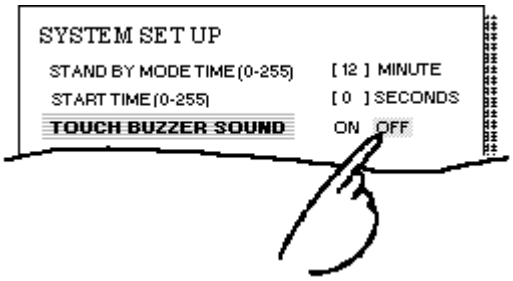

■ After All Setting Data is Entered

Touch the top-left button, titled "SET".

If you wish to exit the screen without saving the changes, touch the CANCEL button.

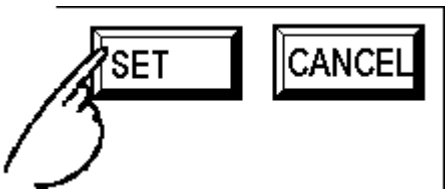

- Press the SET key to write the Setup conditions onto the Internal FEPROM, which may take some time, causing a delay in returning to the previous screen. Therefore, do not touch the screen until the previous menu display returns.
- Press the CANCEL key to *not write* the Setup conditions onto the Internal FEPROM and return to the previous menu.
- When modifying the initial setting data of a GP, all data backed up to that point will be saved if the GP's system version is 1.30 or later.

■ Return To Previous Screen

Touch the title of the screen you would like to return to.

E.g. To return to the MAIN MENU from the SET UP I/O screen, simply touch the MAIN MENU title.

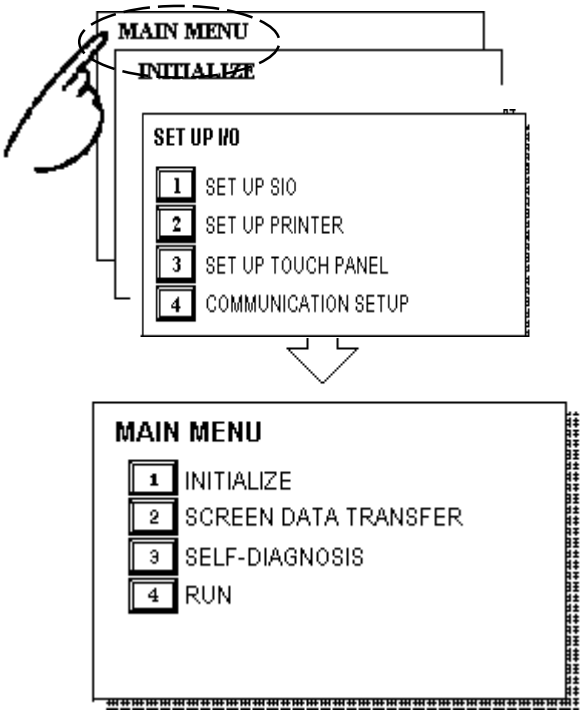

w/the GP577RS:

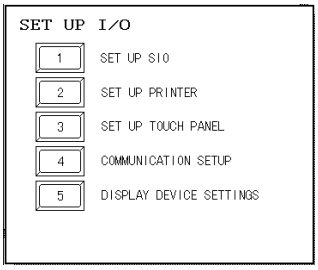

4.4 SELF-DIAGNOSIS—Standard Operation

■ Selecting A Menu

Touch the desired the menu item and that sub-display will appear.

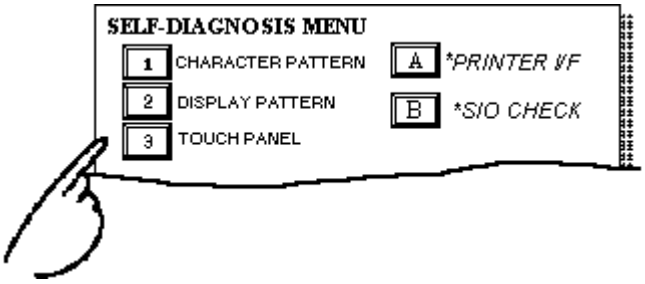

■ CONFIRM, START, CANCEL Keys

After selecting the Self Diagnosis item, the CONFIRM, START, and CANCEL keys will appear at different times at the top of the screen.

E.g.

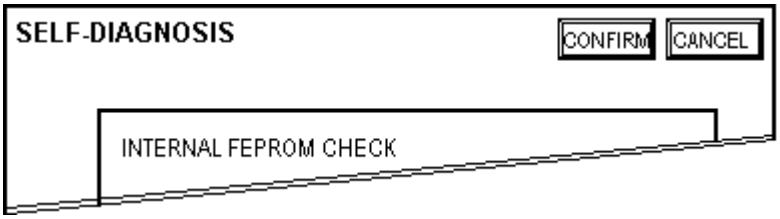

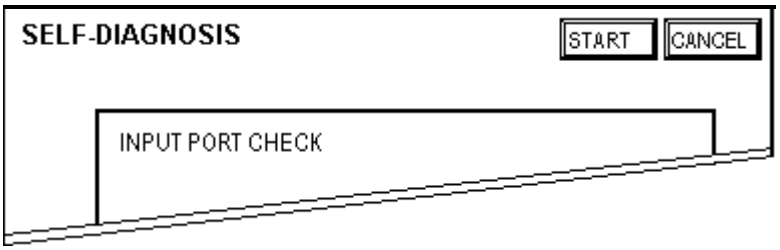

■ **CONFIRM Key**

When you see this key, certain preparations—displayed in a message box in the center of the screen—must be made before the Self-Diagnosis can begin. This key ensures you have made these preparations.
Only touch CONFIRM when you are sure you have accomplished the desired tasks.

■ **START Key**

When this key is pressed, your selected Self-Diagnosis test begins.

■ **CANCEL Key**

When this key is pressed, the selected Self-Diagnosis test is cancelled, and you are returned to the SELF-DIAGNOSIS menu.

■ After Check—To Return To SELF-DIAGNOSIS MENU

When OK displays,

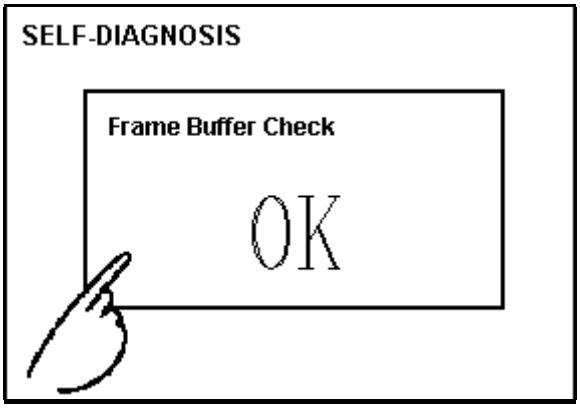

Pressing once anywhere on the display screen returns you to the SELF-DIAGNOSIS MENU.

When an Error Message displays

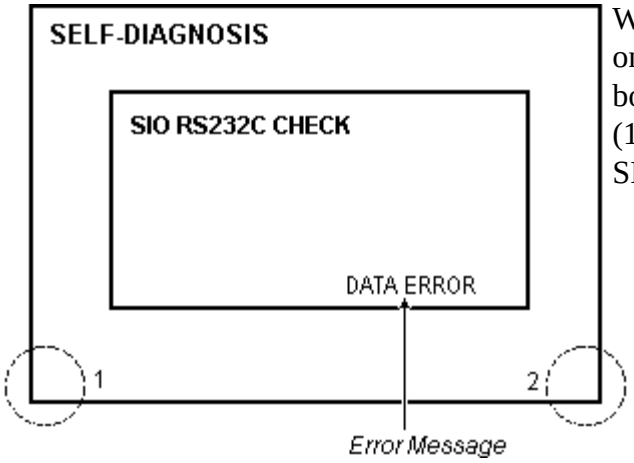

When an error message appears on the display screen, touch the bottom two corners of the panel (1, 2) to return to the SELF-DIAGNOSIS MENU.

■ Return To Main Menu

Touch the RETURN Key in the top right corner of the SELF-DIAGNOSIS menu to return to the MAIN MENU.

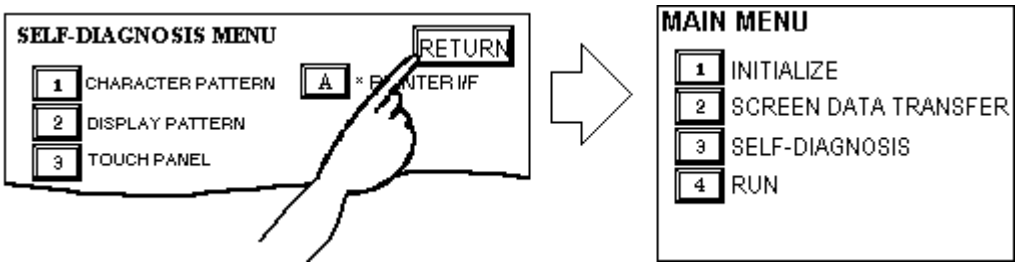

4.5 Transferring Screen Data

This section describes the process required to transfer screen data to the GP, and to receive data from the GP.

Connect the Data Transfer cable to the GP's tool connector, located at the back of the GP, and to the PC's serial port.

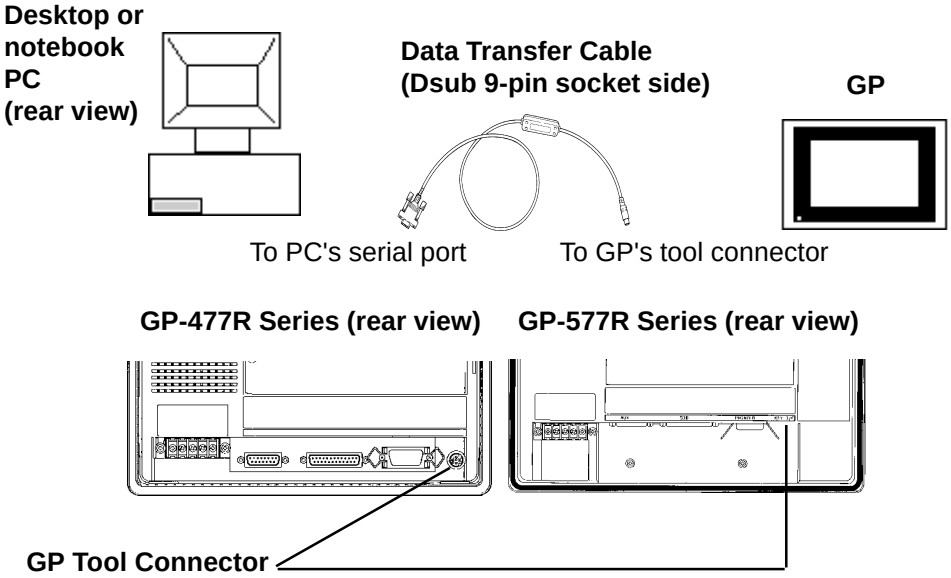

Important

- **When sending the Project file to the GP, separatedly sold GP treansfer cable (GPW-CB02*1) is needed. I/F converting adaptor for PC is not attached to it. Please prepare a connector converting cable applicable to your PC. Connector converting cables are available in general computer stores.**
- **When using a serial mouse, use a different serial port for the data transfer cable.**

Also, please remember that OFFLINE mode is unavailable in a completely new GP until the necessary Screen Data has been transfered from the screen editor software.
Therefore, be sure the GP's power cord is plugged in and no images are displayed on the GP screen. While screen data is being sent from your PC to the GP, the necessary System Data will be sent together with it.

Reference *GP-PRO/PBIII for Windows Ver. 3.0 Operation Manual*

Note:

- **To send screen data to a GP that is currently in OFFLINE mode:**

1) From the OFFLINE mode's MAIN MENU, press (2) to enter the SCREEN DATA TRANSFER mode. This will allow the GP to receive data.

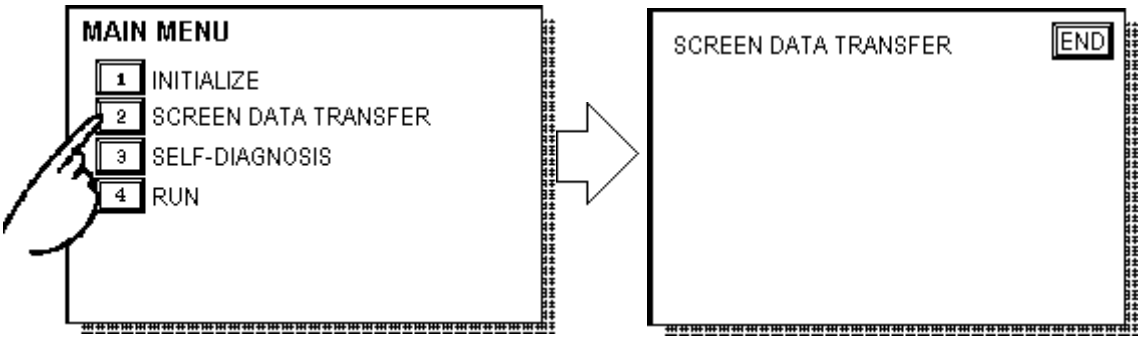

2) If desired, touch the END key or use the GP's Editor Software to stop the transfer. If the Setup[*1] is performed during a transfer, the screen designated in the "INITIALIZE / INITIALIZE SCREEN" setting will display. If no setup information was sent, the GP will then return to the OFFLINE mode's MAIN MENU.

Note: ***When you transfer the information contained in the GP-PRO/PBIII for Windows 's GP System settings to the GP, all OFFLINE MODE [INITIALIZE] setting data in the unit will be lost.***

***1** *Setup means to download the GP's system program and a PLC protocol driver from the screen editor software, in order to run the GP in a desired environment.*

MEMO

Chapter 5

Initializing the GP

1. Initialization Screen
2. Initialization Item
3. SYSTEM ENVIRONMENT SETUP
4. SET UP I/O
5. PLC SETUP
6. INITIALIZE MEMORY
7. SET UP TIME
8. SET UP SCREEN

5.1 Initialization Screen

Occasionally, you may want to change one or more of the GP unit's general operation settings. These settings are listed under the INITIALIZE option in the GP's MAIN MENU.*1

This chapter explains each of the OFFLINE mode's INITIALIZE items. However, there are 2 types of INITIALIZE settings, those for the **1:1** connection and those for the **n:1** (multi-link) connection*2.

The **n:1** mark appears on original menu items concerned only with the n:1 multi-link connection. If there is no mark, the menu item is common to both 1:1 and n:1 connections.

1:1 Processing where a single (1) GP is connected with a single (1) PLC.

n:1 Processing where multiple GP's are connected with a single PLC. The GPs successively pass a *PLC Access Token* (exclusive PLC interaction key) among themselves to designate which will communicate with the PLC.

1:n Processing where a single GP communicates with multiple PLCs.

Reference ***PLC Connection Manual.***

Note:

- **If you transfer your screen design software's System file, the GP operates using that data. If the GP System file has been correctly setup and transferred, the INITIALIZE settings become unnecessary. For more information about GP System files**

  Reference ***Operation Manual, 1.1.2 "Screen Types"***

***1** *A completely new GP will need to have its System data downloaded before the OFFLINE menu can be used.*

***2** *PLC's that support the n:1 (multi-link) connection are limited.*

Reference **PLC Connection Manual**

5.2 Initialization Items

The contents of the Initialize setup items listed below are explained in this chapter. To learn about screen operations and numeric input

Reference *Chapter 4, "OFFLINE Mode"*

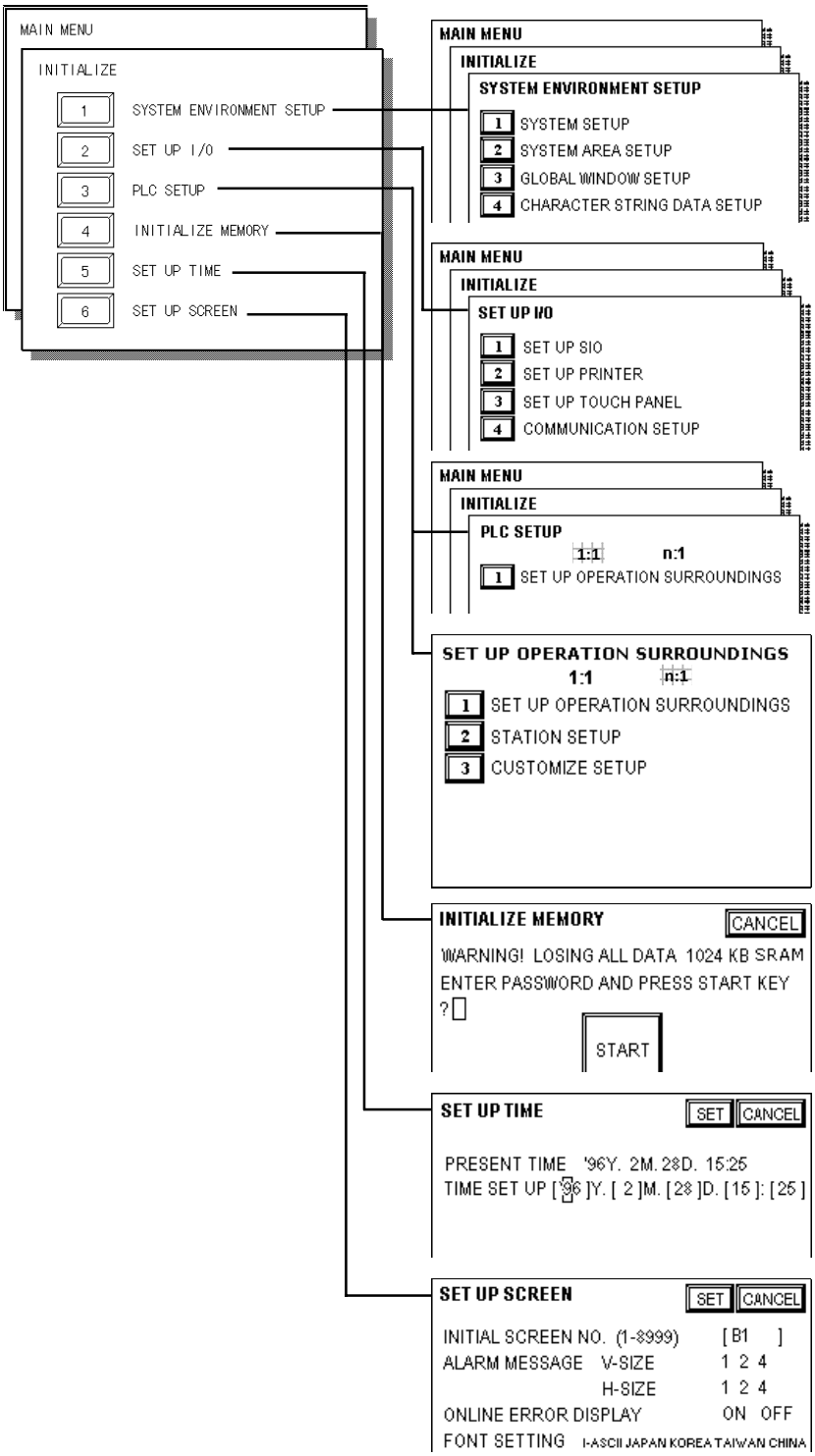

1 SYSTEM ENVIRONMENT SETUP
System Settings
System Area Settings
Global Window Settings
Character String Data Settings

2 SET UP I/O
Set Up SIO
Set Up Printer
Set Up Touch Panel
Communication Setup
Display Device Settings **(only GP577RS)**

3 PLC SETUP 1:1
Set Up Operation Surroundings

3 PLC SETUP n:1
Set Up Operation Surroundings
Station Setup
Customize Setup

4 INITIALIZE MEMORY

5 SET UP TIME

6 SET UP SCREEN

5.3 SYSTEM ENVIRONMENT SETUP

GP environment adjustments are made here. The SYSTEM ENVIRONMENT SETUP includes the SYSTEM SETUP, SYSTEM DATA AREA, GLOBAL WINDOW SETUP, and CHARACTER STRING DATA SETUP.

1. SYSTEM SETUP

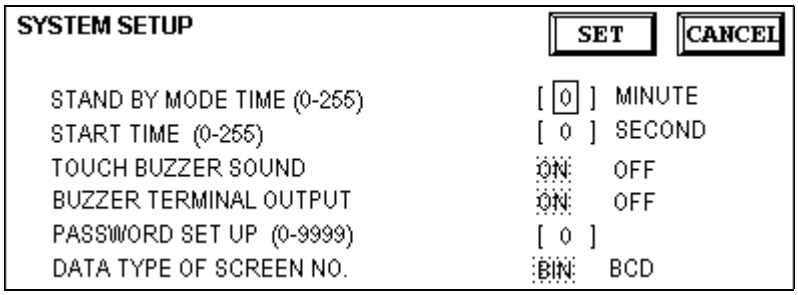

STAND-BY MODE TIME (0-255)

To protect the GP display screen, the GP is equipped with a screen saver function that automatically erases the screen when no GP operations have occurred for a period of time. A **"0"** entered in this field causes a normal display, i.e. the screen is cleared after the GP's standard default time elapses. When SYSTEM DATA AREA's (Reference ***PLC Connection Manual***) SCREEN DISPLAY OFF*1 data is **1 to FFFFH**, and the following operations are *not* performed on the screen for the User's designated period of time, the GP's current display data is cleared.*2

- Change Screen
- Touch Screen
- Alarm Display

START TIME (0-255)

This setup determines the start-up time of the GP. Use this setup to adjust the power up sequence so that the GP starts up after the PLC.

TOUCH BUZZER SOUND

Setup whether or not the GP beeps when pressed.

BUZZER TERMINAL OUTPUT

Setup whether or not the *BUZZ* signal is output from GP's AUX I/F. This option is for an external buzzer.

PASSWORD SETUP(0-9999)

The password setting is used when changing to the Initialize Memory or Initialize (OFFLINE mode) Screens. The password (*number*) ensures protection of the GP settings as OFFLINE mode will not be entered inadvertently. Enter the optional number of your choice. If you do not wish to use this setup, enter the default **0**.

***1** *When using the Direct Access or the Memory Link formats, the object address becomes +9 or +12, respectively.*

***2** *When the GP is in OFFLINE mode, this feature is not enabled.*

DATA TYPE OF SCREEN NO.

This setup controls whether BIN or BCD format numbers are used when making screen changes. Screen numbers 1~8999 are available when set up in binary format; screen numbers 1~1999 are available when set up in BCD format.

2. SYSTEM AREA SETUP

SYSTEM AREA SETUP is necessary for the PLC to administer the GP, and prepare the PLC internal Data Memory (DM) and Data Register (D)*1. Use this setup to prepare the desired SYSTEM DATA AREA items. When using the Memory Link format, this setting is unnecessary.

Reference ***PLC Connection Manual***

Press the item number, and when the item is highlighted, it has been selected.

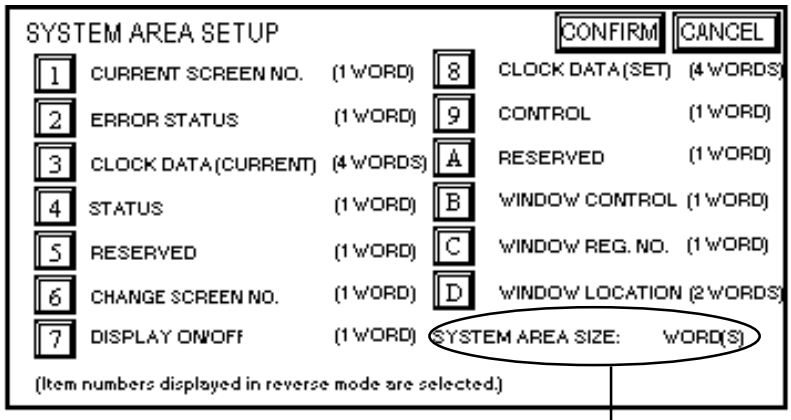

System Area Size

This field displays the total number of words used for the items selected from the SYSTEM AREA SETUP (**Write** 1 to 5 and **Read** 6 to D).

When you press the Confirm key, the SYSTEM AREA CONTENTS screen appears to confirm the selected items

Note:

- **The setup shown is enabled only when using the Direct Access format.**
- **The selected System Area items, as displayed on the screen, become the System Data Area.**

When these five items, "Current Screen Number", "Error Status", "Clock Data (Current)", "Change Screen Number", and "Display ON/Off", have been selected, word addresses are assigned to each item, in order, as shown on the next page.

***1** *Data Memory (DM) refers to OMRON Co.'s PLC ; Data Register (D) refers to Mitsubishi Electric Co.'s PLC.*

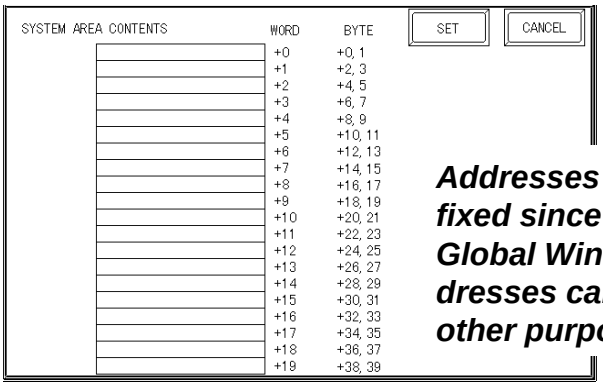

Important

Addresses LS16 to LS19 are fixed since they control the Global Window. These addresses cannot be used for any other purpose.

The System DataArea selection process follows this formula [System Data Start Address + n]. For example, if the System Area Start Address was D00200, and the *Change Screen Number* option had been selected—if you refer to the System Area Contents screen displayed above—because *Change Screen Number*'s address is pegged at +6, its word address would be D00200+6=D00206. For more information on LS Areas 16 to 19,

Reference ***PLC Connection Manual,1.1.2 "LS Area Structure"***

3. GLOBAL WINDOW SETUP

The GP unit can display one *Global Window* and two *Local Windows* at any one time. The Global Window is common to all the display screens. The Local Window displays exclusively on the corresponding base screen. The GLOBAL WINDOW SETUP is described here.

GLOBAL WINDOW

There are two options here: **Use** and **Do Not Use**. If you select **Do Not Use**, ignore the items described below. Selecting **Use** makes these options available.

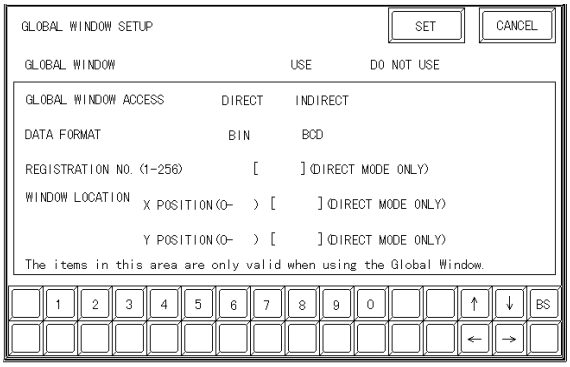

GLOBAL ACCESS WINDOW

Setup the Global REGISTRATION NO. and the WINDOW LOCATION as *Direct* or *Indirect* values. When set as Direct, the REGISTRATION NO. and WINDOW LOCATION selections are fixed to the values setup here. When set to Indirect, the WINDOW REG. NO. word address, as prepared in the System Area, is variable—which means it can have the REGISTRATION NO. *written* to it—and as a result, multiple window screens can be used as Global

windows. Using this same method, adjust the Global window position, by writing the X,Y coordinates to the SYSTEM AREA's WINDOW LOCATION word addresses.

DATA FORMAT
Setup whether the REGISTRATION NO. and the WINDOW LOCATION values are inputted as BIN or BCD numbers. This field affects only direct values.

REGISTRATION NO. (1-256)
Setup the Window Screen Number used by the Global Window. This field is applicable only when the GLOBAL WINDOW ACCESS is set to Indirect.

WINDOW LOCATION
Setup for the Global WINDOW LOCATION. This field is applicable only when the GLOBAL WINDOW ACCESS is set to Indirect.

4. CHARACTER STRING DATA SETUP

Character String Data ordering varies from manufacturer to manufacturer. Setup the Character String Data order here to match the corresponding PLC.

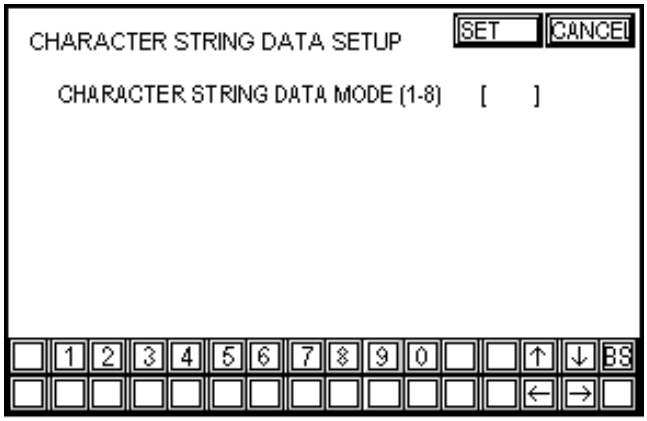

Important

- ***Setup the CHARACTER STRING DATA MODE to match the PLC type. Device type and Tag settings are unavailable.***

Find the data storage order for your PLC in the table, next page, and setup the CHARACTER STRING DATA MODE.

(I) Data Device Storage Order
(II) Internal Word Byte LH/HL Storage Order
(III) Internal Double-word Word LH/HL Storage Order

CHARACTER STRING DATA MODE List

I) Data Device Storage Order	II) Internal Word, Byte LH/HL Storage Order	III) Double-word Internal Word LH/HL Storage Order	Character String Data Mode
Storage from Start data	LH order	LH order	**4**
		HL order	**2**
	HL order	LH order	**5**
		HL order	**1**
Storage from End Data	LH order	LH order	**6**
		HL order	**7**
	HL order	LH order	**8**
		HL order	**3**

I) Data Device Storage Order

E.g. Characters A B C D E F G H

① ② ③ ④

• Storage from Start Data

①	D100
②	D101
③	D102
④	D103

• Storage from End Data

④	D100
③	D101
②	D102
①	D103

II) Word Byte LH/HL Order

E.g. Characters A B C D

①②③④

• 16 bit Device LH Order

②	①	D100
④	③	D101

• 16 bit Device HL Order

①	②	D100
③	④	D101

• 32 bit Device LH Order

②	①	④	③	D100

• 32 bit Device HL Order

①	②	③	④	D100

III) Double-word Word LH/HL Order

E.g. Characters "A B C D E F G H I J"

① ② ③ ④ ⑤

• 16 bit Device LH Order

②	D100
①	D101
④	D102
③	D103
⑤	D104

• 16 bit Device HL Order

①	D100
②	D101
③	D102
④	D103
⑤	D104

E.g. Characters "A B C D E F G H I J K L M N O P Q R S T"

① ② ③ ④ ⑤ ⑥ ⑦ ⑧ ⑨ ⑩

• 32 bit Device LH Order

②	①	D100
④	③	D101
⑥	⑤	D102
⑧	⑦	D103
⑩	⑨	D104

• 32 bit Device HL Order

①	②	D100
③	④	D101
⑤	⑥	D102
⑦	⑧	D103
⑨	⑩	D104

Note: **Relationship between K-tag Write Character Value and PLC Device**

• 16 bit Devices

GP stores the character string from the start, as groups of 2, into1 PLC Device.

When there are nine characters, they are arranged as shown below.

1 2 3 4 5 6 7 8 9 Null

Note: **When the characters do not divide into 2 evenly, NULL is added at the end.**

• 32 bit Devices

GP stores the character string from the start, as groups of 4, into1 PLC Device.

When there are nine characters, they are arranged as shown below.

1 2 3 4 5 6 7 8 9 Null

Note: **When the characters do not divide into 4 evenly, NULL is added.**

5.4 SET UP I/O

This section describes the communication setup with the host PLC and the setup for any peripheral equipment. The SET UP I/O menu includes the SET UP SIO, SET UP PRINTER, SET UP TOUCH PANEL, and COMMUNICATION SETUP menus.

1. SET UP SIO

This menu runs the settings related to PLC communication. Be sure to match the settings listed below with the SIO setup on the PLC host.

Reference **PLC Connection Manual** - *Environment Setup*

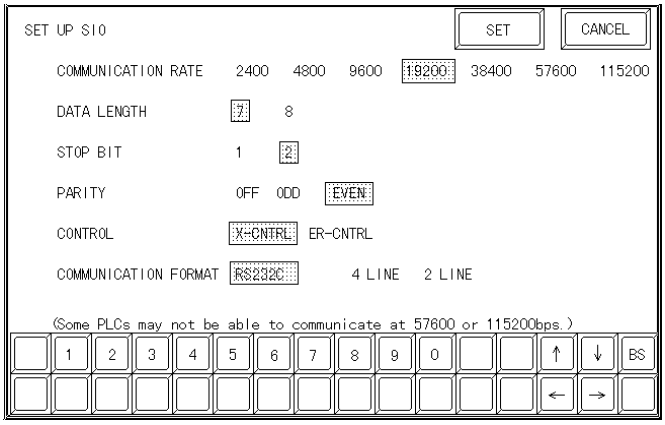

COMMUNICATION RATE

The COMMUNICATION RATE (baud rate) is the data communication speed, measured in bits per second (bps), between the GP and PLC. Match the COMMUNICATION RATE values in both the PLC and GP. Depending on the rate selected, certain PLCs may not be able to be used. Reference ***PLC Connection Manual.***

DATA LENGTH

For data communications, the DATA LENGTH must be set up as 7-bit or 8-bit data.

STOP BIT

Set up the STOP BIT as either a 1-bit or 2-bit value.

PARITY

Set up whether no parity check, or an odd or even number parity check will take place during communication.

CONTROL

Data flow CONTROL prevents the overflow of data sent back and forth. Select either X-CNTRL or ER-CNTRL.

COMMUNICATION FORMAT

Select one of the following options for the communication format: RS-232C, RS-422 (4 line), or RS-422 (2 line).

Important

- ***When using an RS422 cable and the Memory Link format, be sure to select the 4-line option.***

2. SET UP PRINTER

GP477R

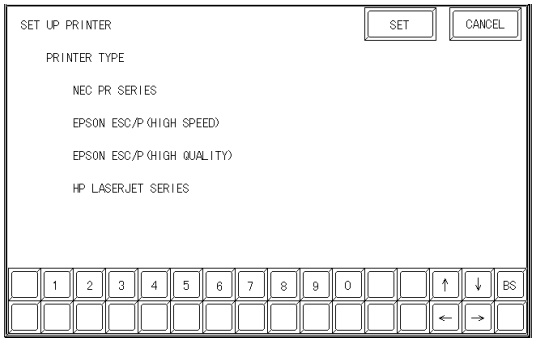

GP577R

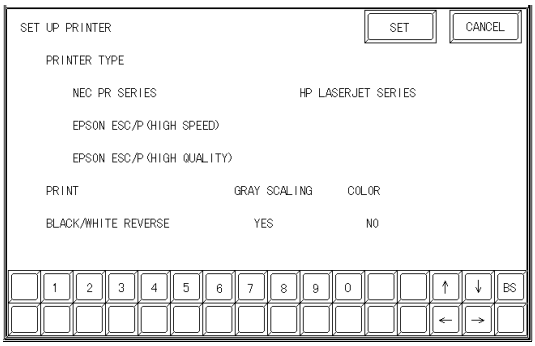

PRINTER TYPE
Setup up the type of printer used with the GP unit.
Use either EPSON option for 24 dot printers, and the HP-LaserJet Series option for PCL4 compatible printers.

PRINT (only GP-577R)
Designates whether the printer prints in Gray scale or Color.
With Gray-scale selected, the printout of Blue and Green, Cyan and Red, and Purple and Yellow will appear with the same pattern.

Important

- ***The HP-LaserJet Series does not support GP color printouts. Always setup as GRAY SCALING.***
- ***Choosing Gray-Scale will reduce the 64 colors to simplified grays. This will effectively eliminate pale or pastel colors.***

BLACK/WHITE REVERSE (only GP-577R)
This setup reverses the screen colors from white on black (Fg/Bg) to black on white for screen printouts. The screen background on the GP is black, but it is easier to see screen objects on the hardcopy when *Reverse* is ON so the screen prints white.

E.g. When the GP screen background is black and the foreground is white, the printout appears as follows.

Print w/ Reverse ON

Print w/ Reverse OFF

Important

- ***The previous setup is only for printing a hard copy of the screen image. When an Alarm report is printed, no matter what this setting is, it will print as if REVERSE is ON.***

3. SET UP TOUCH PANEL

Touch operation and Force Reset setup, and Display Device adjustments are made here.

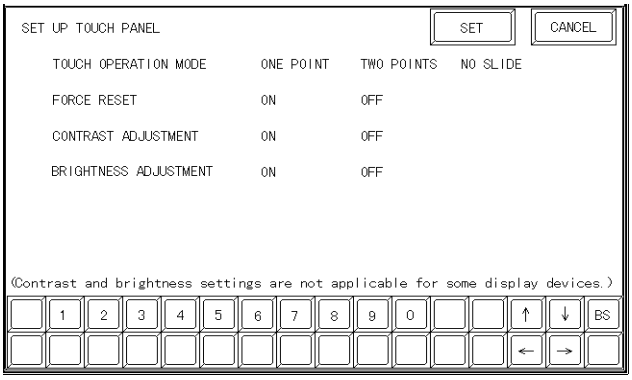

TOUCH OPERATION MODE

Designates either One Point, Two Point or No Slide. When No Slide is selected, dragging one's finger across the touch screen will elicit no screen response, and only individually selected points will register.

FORCE RESET

Set up whether or not a FORCE RESET operation is in effect.

Steps to run FORCE RESET

While holding down the bottom right corner (1) of the screen, press the upper right corner (2). At the same time, press the bottom left corner (3) to enter the FORCE RESET Operation. To activate Reset, press the **RESET** button, to transfer to OFFLINE Mode, press **OFFLINE**.

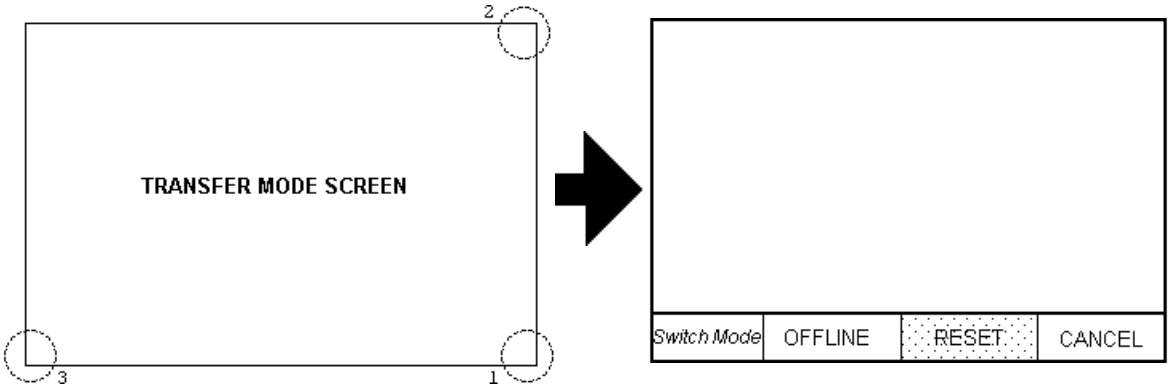

Important

- ***FORCE RESET can occur during either RUN mode or OFFLINE mode.***
- ***The FORCE RESET mode cannot be entered while the GP is starting up.***
- ***Entering FORCE RESET is possible even when RUN operations (PLC <—>GP communication) are not being performed.***

CONTRAST ADJUSTMENT (Only for GP-577RS)

When this option is set ON, CONTRAST ADJUSTMENTs can be made through touch input.

Important

Be sure to press the GP corners in the order shown. If only corner (2) is pressed OFFLINE mode will start.

While pressing the upper right hand corner (1) of the screen, press the upper left corner (2) to enter CONTRAST ADJUSTMENT mode. Press the desired setting and the screen's contrast will change accordingly.

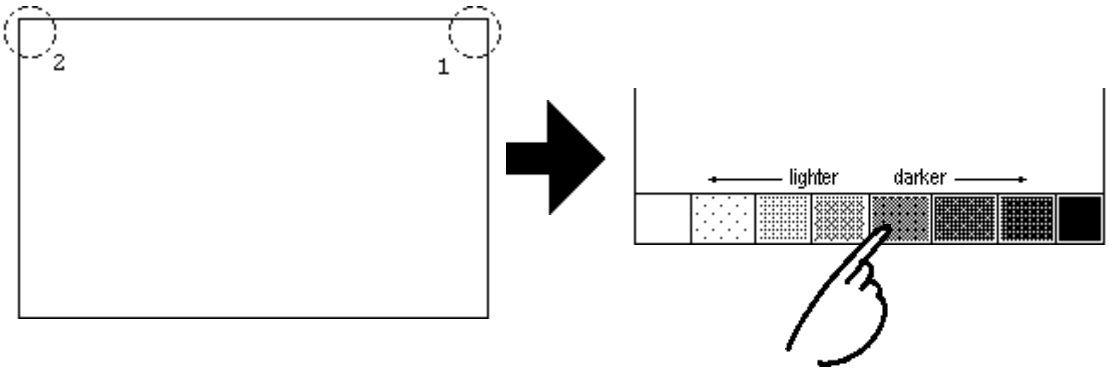

Note:

- **To exit CONTRAST ADJUSTMENT mode, press anywhere outside the contrast option bar.**
- **CONTRAST ADJUSTMENT mode cannot be entered while waiting for GP to start up.**
- **CONTRAST ADJUSTMENTs can be made even in the middle of RUN mode (PLC<—>GP communication).**

BRIGHTNESS ADJUSTMENT

When set to ON, BRIGHTNESS ADJUSTMENTs can be accomplished through touch input.

Press the bottom left corner (2) of the screen while holding down the bottom right corner (1) to enter BRIGHTNESS ADJUSTMENT mode. Touch the left-side of the bar to brighten the display; touch the right-side of the bar to dim the display.

The GP477R series unit has two levels of adjustment, and the GP-577R series unit has 4 levels.

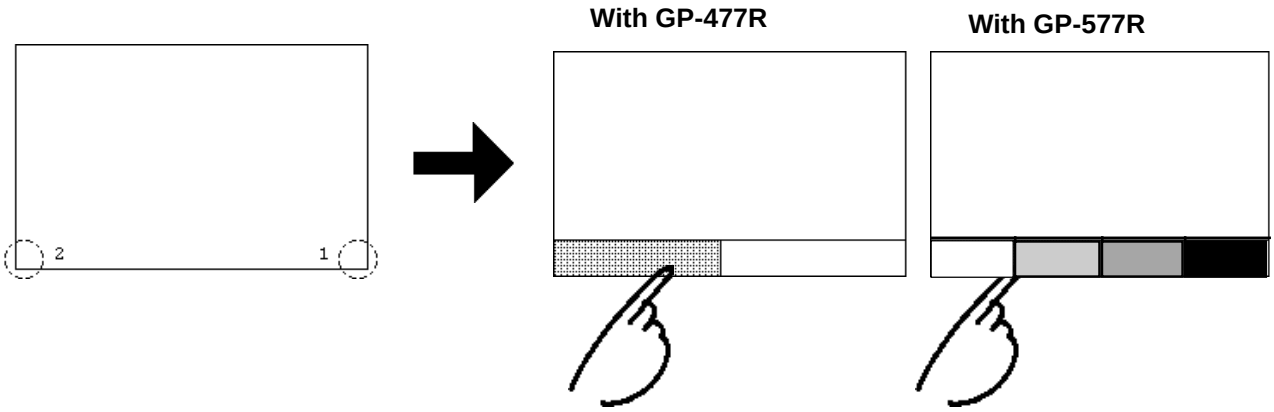

Note:

- **With the GP-577RS series unit, reducing the display brightness may cause flicker. Adjust it by changing the display device settings.**

  Reference *5. "DISPLAY DEVICE SETTINGS"*

- **To end BRIGHTNESS ADJUSTMENT mode, press anywhere outside the bottom of the screen.**
- **BRIGHTNESS ADJUSTMENT mode cannot be entered while waiting for GP to start up.**
- **BRIGHTNESS ADJUSTMENTs can be made even during RUN mode (PLC<—>GP communication).**

4. COMMUNICATION SETUP

These fields set *when* an error message is reported after a GP<—>PLC communication error is detected. This ensures an error has actually taken place and not just slight breaks in communication or slowness in processing data on one side or the other.

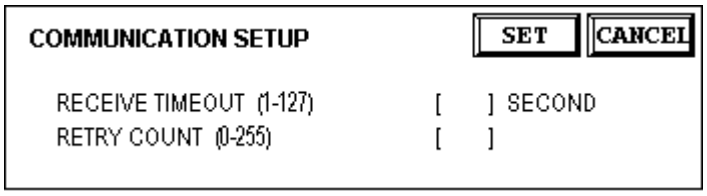

RECEIVE TIMEOUT

Set up how long the GP unit will wait when there is nothing being sent to it. (This is the *Timeout Time*.) However, if there is no cable connected up, then regardless of the time set up here, the Timeout value is 1 second. The default value is 10 seconds.

Note:

- **When a value of over 30 seconds is set here, and a screen is transferred from the PC while a PLC Communication Time error has occurred, an error may also appear on the PC side.**

RETRY COUNT

Set up the number of times the GP will try to send data when a Communication error occurs. Even if the data is resent, unless the transfer is successful, an error message will be displayed on the GP.

5. DISPLAY DEVICE SETTINGS (only for GP577RS)

Depending on the GP's Environment and Brightness settings, sometimes the screen's display will seem to flicker. This may be because the brightness has been set to low, or that the GP's surrounding environment has become either too hot or too cold, however, this problem does not usually occur. In order to correct this problem, please use the following setting.

Note:

- **This setting is only available on the GP577RS unit.**

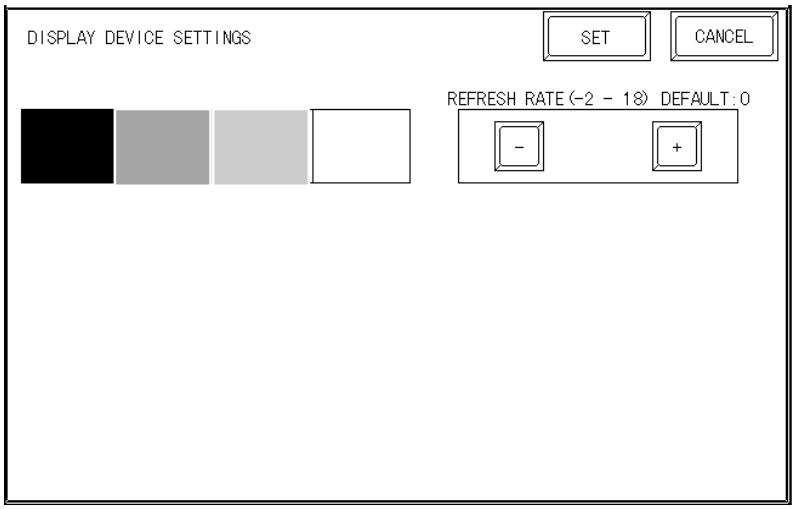

REFRESH RATE

Use the four display samples on the left side to gauge whether the "+" or "-" adjustments help to correct the problem. While the normal setting value is "0", there are two levels available in the minus direction (from "0") and 18 levels available in the "+" direction (from "0").

5.5 PLC SETUP

Setup the System Area and the Unit number in this screen. Because 1:1 and n:1 GP connections utilize different settings, confirm your connection's needs before using any settings.

Note: **With the GP-PRO/PB III for Windows95 "Simulation" feature, the GP's "Setup Operation Surroundings" area cannot be used.**

1. SET UP OPERATION SURROUNDINGS (1:1)

Enter the PLC System Data Area and the Unit Number settings here.

Note:
- **This setup is only necessary when using the Direct Access format.**

```
SET UP OPERATION SURROUNDINGS                          SET      CANCEL

    STARTING ADDRESS OF SYSTEM DATA AREA             [ D00000   ]

    UNIT NO.                                         [ 0 ]

    SYSTEM AREA     READING AREA SIZE  (0-256)       [ 0 ]
```

STARTING ADDRESS OF SYSTEM DATA AREA
Setup the PLC's Data Register (D), Data Memory (DM), etc. allotted by the STARTING ADDRESS OF SYSTEM DATA AREA.

UNIT NO.
Set up the PLC UNIT number here. Make sure it matches the one set up in the PLC.

SYSTEM AREA—READING AREA SIZE (0-256)
When using a Block Display Trend Graph, setup the Reading Area Size (in word units) to match the Trend Graph's data size. Setup when you wish to allocate the Reading Area in the PLC Data Register (D), or Data Memory (DM).

Important
- ***If you are not using the Reading Area, leave the 0 default values intact. High Speed Communications can be secured as a result.***
- ***When using Hitachi's HIDIC-S10 a Series, an extra item titled "Extended Memory Address (HIDIC) [000000]" is added to the above screen display. Values accepted by the extended memory start address are 0 (memory not extended), and 100000~1FF000.***

Note:
- **When using Matsushita Electric's NEWNET-FP, an extra item titled "Monitor Register" is added to the screen display. If using 2 or more CCU's (communication unit) as in the following diagram, and a GP is connected to each CCU, <u>select 1:1 connection and setup the Monitor Register as "None".</u>** ***(see next page)***

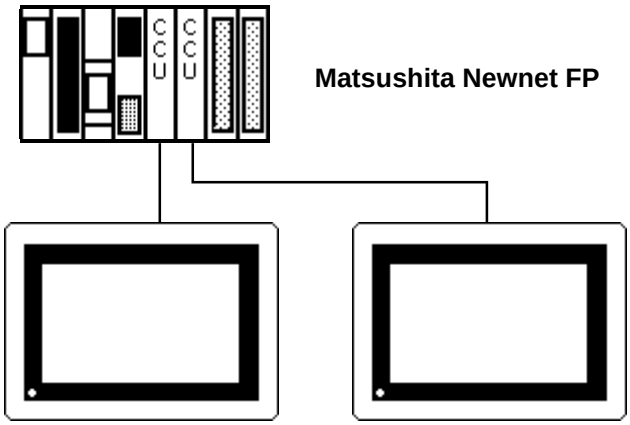

Note:

- **When connecting only one GP (to a PLC), be sure to set the Monitor Register to ON.**

2. SET UP OPERATION SURROUNDINGS (n:1)

This is the setup for the PLC System Data Area and the Unit Number for an n:1 (multi-link) PLC connection. For more about the SYSTEM DATA AREA with the n:1 (multi-link) connection,

Reference ***PLC Connection Manual***

Note:

- **This setup is only necessary when using the Direct Access format.**

```
SET UP OPERATION SURROUNDINGS                          SET      CANCEL

    STARTING ADDRESS OF SYSTEM DATA AREA              [ D00000   ]

    UNIT NO.                                          [ 0 ]

    SYSTEM AREA     READING AREA SIZE  (0-256)        [ 0 ]
```

STARTING ADDRESS OF SYSTEM DATA AREA

Setup the PLC's Data Register (D), Data Memory (DM), etc. allotted by the STARTING ADDRESS OF SYSTEM DATA AREA.

UNIT NO.

Set up the PLC UNIT number here. Make sure it matches the one set up in the PLC.

SYSTEM AREA—READING AREA SIZE (0-256)

When using a Block Display Trend Graph, setup the Reading Area Size (in word units) to match the Trend Graph's data size. Setup when you wish to allocate the Reading Area in the PLC Data Register (D), or Data Memory (DM).

Important

- ***If you are not using the Reading Area, leave the 0 default values unchanged. This will allow High Speed data transmission to be performed.***

3. STATION SETUP (n:1)

The STATION SETUP, necessary for the n:1 (multi-link) setup, checks whether correct communications run with the connected GP System configuration.

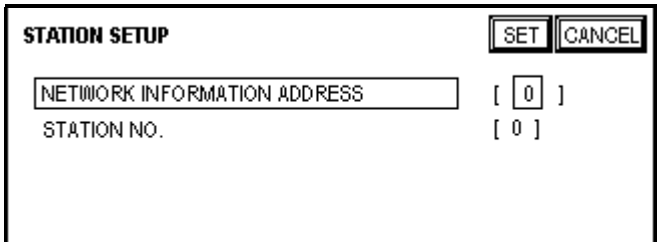

NETWORK INFORMATION ADDRESS

In the n:1 (multi-link) connection, the Network Information uses 2 words in its correspondences. These two (2) words consist of a Connection List and a Validation List (described later in this section). These areas are allocated in the PLC's Data Register (D) or Data Memory (DM).

PLC Data Register

+0	CONNECTION LIST	PLC-->GP
+1	VALIDATION LIST	GP-->PLC

Important

In the NETWORK INFORMATION ADDRESS, setup the same address to all the GP's connected to the same link unit. Furthermore, when there are 2 ports in the connected link unit, do not make them the same address.

• Connection List

The word address for the Connection List sets up the number of GP's connected to the PLC, which must be registered beforehand on the PLC side. When these GP's are connected to the PLC, the corresponding PLC bit numbers for the particular GP Stations (see below) turn ON.

Note:

When the GP is connected to the PLC, and the option of GP only correspondence ends and OFFLINE mode is entered, the GP Station Number turns the corresponding PLC bit OFF.

Bit 15 Bit 0

15	14	13	12	11	10	9	8	7	6	5	4	3	2	1	0
unit	unit	unit	unit	unit	unit	unit	unit	unit	unit	unit	unit	unit	unit	unit	unit

For example, when these 4 GP units—bit 0, bit 2, bit 3, bit 5—are connected, 002D (h) is written here.

Connection List	0	0	0	0	0	0	0	0	0	0	1	0	1	1	0	1	**002D (h)**

Important

- ***Be certain to setup this data before running.***
- ***Turn all bits not related to the GP OFF.***

• Verification List

This area responds to the correspondence from each connected GP. In the Verification List, when the same bit numbers as the Connection List turn ON, the corre spondence is accepted. The Station Numbers of the communicating GPs turn their corresponding PLC bit number ON.

Bit 15 Bit 0

15	14	13	12	11	10	9	8	7	6	5	4	3	2	1	0
unit	unit	unit	unit	unit	unit	unit	unit	unit	unit	unit	unit	unit	unit	unit	unit

If the correspondence between the GP and PLC is correct, the same value as in the Connection List is written to the Verification List.

For example, the value 002D (h) in the Connection List, setup as the 0 bit, 2 bit, 3 bit, and 5 bit, writes to the Verification List.

Connection List	0	0	0	0	0	0	0	0	0	0	1	0	1	1	0	1	**002D (h)**
Verification List	0	0	0	0	0	0	0	0	0	0	1	0	1	1	0	1	**002D (h)**

Important

- ***When the Connection List and Verification List do not match, a COMMUNICATION ERROR occurs. Check the setup again.***
- ***When changing the connection, first turn all the bits OFF.***
- ***Even if the GP is connected, if the Connection List is turned OFF, data transfer cannot occur, and an error will not display.***

STATION NO.

This is the setup for the GP Station Number mentioned in the above section. The setup range is from 0 to 15, and the only other restriction is the GP STATION NO. must be unique in the system. If STATION NO.'s are repeated, a COMMUNICATION ERROR occurs.

Note:

- **The STATION NO. is the number allocated to the particular GP unit. This number is not related to the Link Unit Machine number.**

4. CUSTOMIZE SETUP (n:1)

The Customize function modifies the n:1 (multi-link) connection's communication method to make it more effective. To run communication efficiently, the user should first determine whether they wish to have Operation or Display priority set for the GP. Based on this, the communication response speed can be upgraded. (However, this also depends on the screen information displayed)

```
CUSTOMIZE SETUP                                   SET      CANCEL

    PLC PRIORITY                      DISPLAY       OPE.

    GP TOUCH MONOPOLIZE               ON            OFF

    MONOPOLIZE TIME(0-2550s)                      [    ]*10s
```

PLC PRIORITY

According to how the GP is used, select either Operation priority (OPE.) or Display priority.

- Display

Setup the GP to this option when using the GP mainly as a monitor screen. The GP will command a higher display speed as a result; however, the response time for the touch panel's operations will slow.

- Operation

Setup the GP to this option when using the GP mainly as an operation panel. As a result, the GP will command better touch panel numeric input and switch response times.

Leaving the GP in this mode does not influence the touch panel operation response time of the rest of the GP's very much; however, the screen display renewal cycle will slow down

Note:

- **In a standard setup, run the same setup for all connected GP's.**
- **To increase the display speed, restrict the address setup to consecutive addresses wherever possible. And make bit addresses consecutive to the word unit.**

• Speed Difference between Display Priority and Operation Priority

When using the Mitsubishi Electric Corp. A3A PLC, with a scan time of 20ms with consecutive addresses (80 words not included in the System Area), the difference in reading speed is as shown in the following graphs.

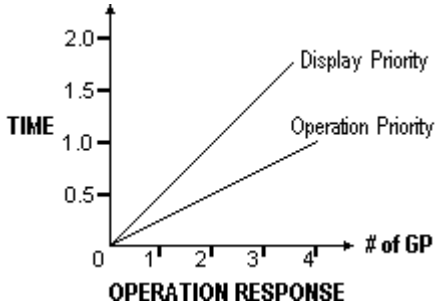

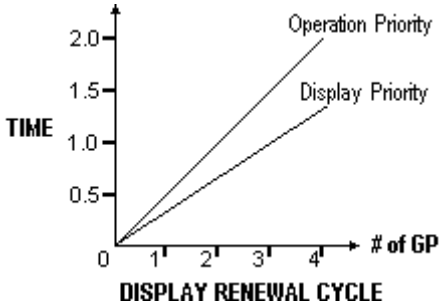

GP TOUCH MONOPOLIZE

The monopolizing of touch panel use can be set ON or OFF. When you want to use the PLC exclusively (Reference ***PLC Connection Manual 4-5 About PLC Monopolize***) with a Momentary operation setup on the touch panel, turn GP TOUCH MONOPOLIZE ON.

When this setup is ON, the touch panel uses the PLC exclusively whenever the momentary operation setup on the panel is pressed. In this way, you can use the inching operation with a momentary switch. When you stop pressing the panel, exclusive use ends.

MONOPOLIZE TIME (0 to 2550s)

This field controls the length of time for the monopolize process when no other touch panel operations are performed. The Monopolize process begins when the System Data Area's 7th bit of word address LS14 turns ON, and ends either when the bit turns OFF, or when the time set here elapses.

Note:

- **Pressing the touch panel in the middle of the monopolize process interrupts the MONOPOLIZE TIME function, and ends exclusive use.**
- **When MONOPOLIZE TIME is set to 0, the monopolize function does not end automatically.**

For more about the contents of System Data Area LS6 (status) and LS14 (control)

Reference ***PLC Connection Manual***

5.6 INITIALIZE INTERNAL MEMORY

This command erases all the GP screen data and initializes the GP's SRAM.

Important

- ***You cannot cancel the Initialization procedure after pressing the Start key.***
- ***All backed up data in SRAM is lost.***
- ***Initialization does not erase the SYSTEM SET UP, the SIO protocol, or the internal clock settings.***

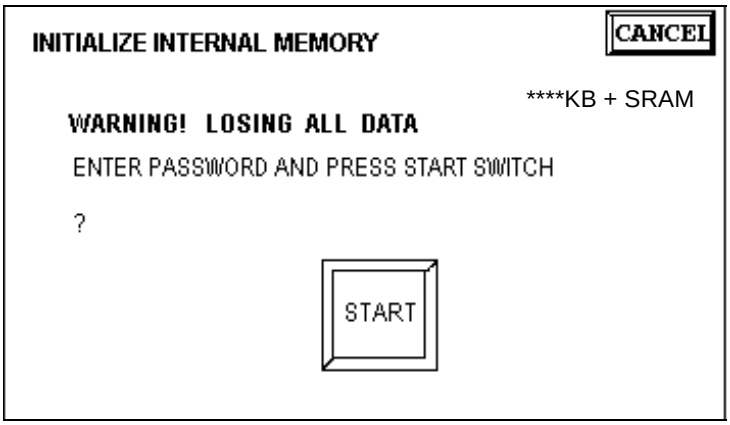

To initialize the GP internal memory, enter the common password **1101**, or the password entered in the SYSTEM SET UP screen.

Reference *Chapter 4, "Input Number"*

Note:

- **The time required for Initialization is between 10 and 20 seconds.**

5.7 SET UP TIME

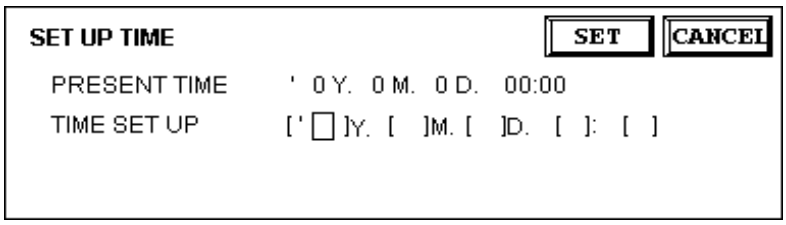

Sets the GP's internal clock.

SET UP TIME

Enter date and time corrections to the date and time displayed in the PRESENT TIME.

Note:

- **The GP's internal clock has a slight error. At normal operating temperatures and conditions, with the GP operating from its lithium battery, the degree of error is 65 seconds per month. Variations in operating conditions and battery life can cause this error to vary from +90 to -380 seconds per month. For systems where this degree of error will be a problem, the user should be sure to monitor this error and make adjustments when required.**
- **When writing the clock data in the System Data Area, input Year, Month, Date, Hour and Minute, like setting the clock data in the OFFLINE mode.**

5.8 SET UP SCREEN

The initial screen display upon powering up, the character size when in RUN mode, and other related general screen items are setup here.

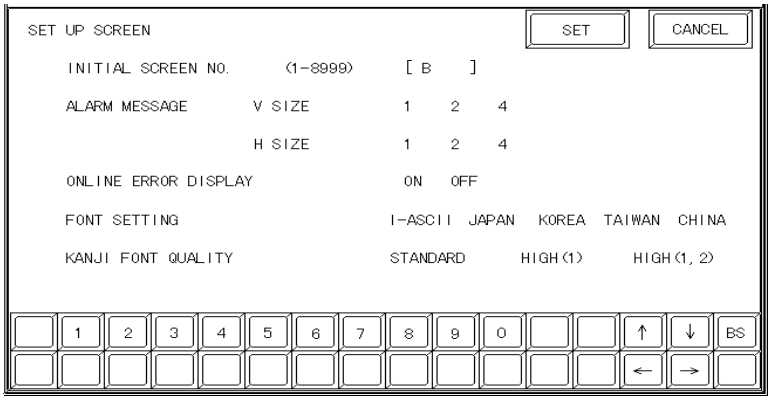

INITIAL SCREEN NO.

Set up the screen file number that will display first upon powering up. If the BIN option for DATA TYPE OF SCREEN NO in SYSTEM SET UP had been selected, enter a number from 1 to 8999. Or, if BCD was the option set up, then input a number from 1 to 1999.

ALARM MESSAGE

Set up the character size of the ALARM MESSAGE when the Alarm Bulletin is activated.

1	2	4
Height=1; Width=1 **16×8 pixels**	**Height=2; Width=2** **32×16 pixels**	**Height=4; Width=4** **64×32 pixels**

ONLINE ERROR DISPLAY

Set up whether or not error messages display during RUN mode.

FONT SETTING

Select the character font that displays during RUN mode.

KANJI FONT QUALITY

When “FONT SETTING” is set to “JAPAN” :

When the kanji (Chinese) character quality is set to HIGH, Larger than double sized (32X32) characters display as 32 dot characters. When STANDARD is selected, the display becomes a 16 dot font multiple.

When “FONT SETTING” is set to any other setting :

Selecting the HIGH setting will cause single-byte characters (with some exceptions) to display as high quality characters. Selecting STANDARD will cause standard single-byte characters to be displayed.

Note:

- **When set to the HIGH quality setting, the Level 1 JIS Kanji Code standard is the object. Level 2 standard characters, no matter what the setting, display as 16 dots.**

Chapter 6

GP RUN Mode and Errors

1. GP RUN Mode
2. Troubleshooting
3. SELF-DIAGNOSIS
4. Error Messages

This chapter describes both the GP RUN mode and GP problem solving processes.

6.1 GP RUN Mode

There are two ways of entering the GP's RUN mode; first, immediately after plugging in the unit's power cord, and the other, from the GP's OFFLINE mode.

1. After Powering Up the GP

First, connect the GP's power cable. After the unit has powered up, the START TIME value, set up in INITIALIZE area's SYSTEM SET UP feature, determines how long the display shown below is shown. If, however, a screen has not been designated in the INITIALIZE area's SET UP SCREEN feature, or if the screen itself does not exist, then this display will remain.

2. Via OFFLINE Mode

Touch the MAIN MENU's RUN selection to start your downloaded "project". The INITIALIZE area's SET UP SCREEN feature designates the first screen that appears in RUN mode, and, after this screen appears, communication with the PLC begins. If, however, the designated initial screen has not been created, or does not exist, the above display will remain.

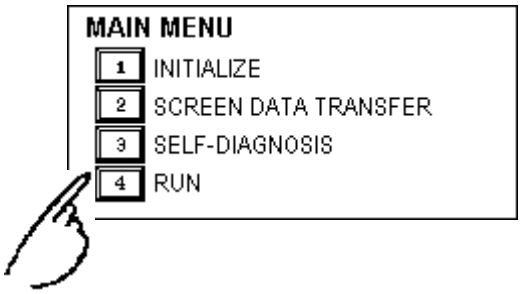

Note:

- **To enter OFFLINE Mode, simply touch the top left corner of the GP's screen within 10 seconds after connecting the GP's power cord.**

E.g. After powering up the GP, the initial screen that appears is equipped with a built-in (invisible) switch in the top left corner. Touch this switch within 10 seconds to change the GP from RUN to OFFLINE mode.

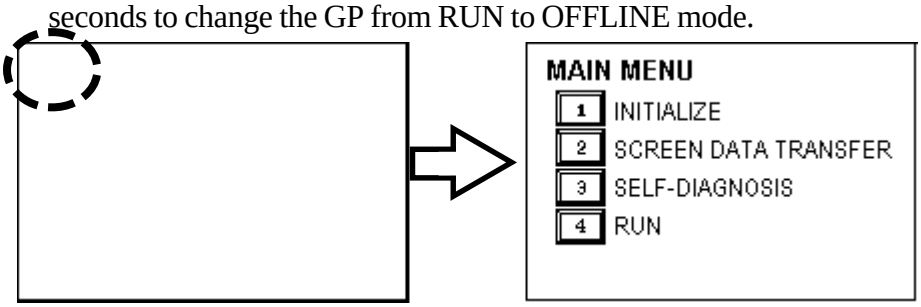

6.2 Troubleshooting

This section describes how to find and resolve problems that may occur on the GP. If there is a problem on the PLC side, refer to the corresponding PLC manual.

1. Possible Types of Trouble

Shown below are some problems that may occur while using this unit.

(A) No Display

The screen will not display even when the unit is powered On. Also, during RUN mode, the screen disappears.

(B) No GP/HOST Communication

The GP unit cannot extract data from the host. An error message may appear on the screen as a result.

Reference this chapter's "Error Messages".

(C) Touch Panel Does Not Respond

The touch panel does not react when pressed, or the reaction time is very slow.

(D) OFFLINE displays During RUN Mode

For these first three problems, see the following pages' troubleshooting tables.

For the last problem (D), a SYSTEM ERROR may have developed while displaying the OFFLINE mode screen.*1

Reference *Chapter 6.4.2 Error Message Details*

*1 *If the user has touched the top left corner of the screen within 10 seconds after powering up the GP, the change to the OFFLINE screen is normal.*

2. Troubleshooting Checklists

Refer to the following checklists when trouble with the GP occurs. Follow the steps given in order to locate the cause of the problem. If you still cannot fix the problem, or the characters **((H))** (hardware problem), or **((S))** (software problem) are used, please contact your local authorized Proface dealer for service and advice.

(A) "No Display" Checklist

No.	Check Item	OK	Corrective Measure(s)
1	Unplug the GP's Power Cord.		
2	Is the GP's Power Cord correctly connected to the GP?		Connect the power terminals correctly.
3	Is the voltage being supplied within the specified voltage range?		Reference *2.1 General Specifications*
4	Reconnect the GP's Power Cord.		
5	Does the GP's power lamp light?		Does not light. ((H))
6	(Only with GP577R) Are both the backlights lit?		(1) In the PLC's System Data Area, if the backlight's OFF bits are turned ON, the backlight will not light. Turn the appropriate bits OFF. Reference PLC Connection Manual (2) If one or both of the backlight(s) are burned out, change both backlights. Reference *7.3 Changing the Backlights* (3) If neither (1) nor (2) succeed in fixing the problem, please contact your local GP distributor. ((H))
7	In the PLC's System Data Area, is data written to the backlight's display OFF area?		Delete the OFF data. Reference PLC Connection Manual
8	Has all the data from the Screen Editor software been transferred correctly?		Reference Operation Manual
9	Unplug the GP's Power Cord and disconnect all other cables attached to the GP.		
10	When the Power Cord is reconnected, does touching the upper left corner of the GP change the unit to OFFLINE mode?		Reference *Ch. 4 - OFFLINE Mode*
11	Check that the [INITIAL SCREEN NUMBER]'s setting is correct. Path:[MAIN MENU] to [SYSTEM ENVIRONMENT SETUP] to [SET UP SCREEN] menu.		Reference *5.8 SET UP SCREEN*
12	Use the [INTERNAL EPROM (SCREEN AREA)] feature to check the GP's screen. Path: [MAIN MENU] to [SELF-DIAGNOSIS] menu.		Important This action will destroy all the GP's current data Reference SELF-DIAGNOSIS If this fails to correct the problem, ((H))
13	Use the [INITIALIZE MEMORY] feature to clear the contents of memory. Path: [MAIN MENU] to [INITIALIZE] menu.		Reference *5.6 INITIALIZE MEMORY*

No.	Check Item	OK	Corrective Measure(s)
14	Unplug the GP's Power Cord and connect the GP's Data Transfer cable.		Reference Operation Manual
15	Reconnect the GP's Power Cord and re-transfer the screen data from your PC.		
16	Unplug the GP's Power Cord and disconnect the Data Transfer cable. Then, attach the PLC data transfer cable to the GP.		Be sure only the GP's Power Cord and the PLC data transfer cable are connected. 3.2 Wiring Cautions & PLC Connection Manual
17	Does reconnecting the GP's Power Cord cause screen data to appear?		If NO, ((S)) Reference
18	Unplug the GP's Power Cord and securely attach all the GP's cables. Then, reattach the GP's Power Cord.		
19	Does the screen data display normally?		If NO, try to confirm which cable may be causing the problem. ((H))

***System Data Area Addresses**

Feature / Connection	Backlight OFF	Display OFF
Direct Access Type	Address +14 (Bit 0)	Address +9
Memory Link Type	Address 11 (Bit 0)	Address 12

(B) "No GP/Host(PLC) Communication" Checklist

When the GP will not communicate with the host PLC, follow the checklist below to discover the origin of the problem and find a suitable solution.

Or, if an error message appears on the screen, check the error code (refer to the *Error Message* section in this chapter) to find the appropriate solution.

No.	Check Item	OK	Corrective Measure(s)
1	Unplug the GP's Power Cord.		
2	Is the GP's Power Cord correctly connected to the GP?		Connect the power terminals correctly.
3	When using an RS422 cable: Is the terminating resistor correctly attached?		Attach the resistor correctly. A terminating resistor's usage, placement location, and resistance value will vary according the PLC used. Reference PLC Connection Manual
4	Was the correct [PLC Type] selection made in the Screen Creation software?		Re-designate the PLC type. Reference Operation Manual Reference Connection Manual
5	Are any tag address settings incorrect?		Correct the incorrect settings. Reference Operation Manual Reference Tag Reference Manual If the problem with the settings cannot be found, ((S)).
6	Unplug the GP's Power Cord. Disconnect all other cables connected to the GP.		
7	Reconnect the GP's Power Cord and enter the GP's OFFLINE mode.		Reference *Ch. 4 - OFFLINE Mode*
8	Are all the SET UP SIO area's settings correct? Path: [MAIN MENU] to [SET UP I/O]		Reference 5.4.1 SET UP SIO, PLC Connection Manual
9	Is the result of the [COMMUNICATION CHECK] OK? Path: [MAIN MENU] to [SELF-DIAGNOSIS] menu		To perform this check a special cable is required. Reference 6.3.2 Self-Diagnosis Details If not OK, ((H))
10	Unplug the GP's Power Cord and check that the Data Transfer cable is connected correctly.		Reference Operation Manual
11	Reconnect the GP's Power Cord and transfer normal screen data to the GP.		
12	Unplug the GP's Power Cord and unplug the GP's Data Transfer cable. Next, connect the host (PLC)'s data transfer cable to the GP.		Be sure only the GP's Power Cord and the PLC's data transfer cable are connected. Reference 3.2 Wiring Cautions, PLC Connection Manual
13	Reconnect the GP's Power Cord. Is data transfer now possible?		If it is not possible, please check that the PLC's data transfer settings are correct. ((S))
14	Unplug the GP's Power Cord and check that all cables are correctly connected to the GP. Next, reconnect the GP's Power Cord.		
15	Did performing the above actions solve the problem?		If not, try to confirm which cable is causing the problem. ((H))

(C) "Touch Panel Does Not Respond" Checklist

When the touch panel does not respond, or its reaction time is very slow after it is pressed, please follow the flowchart below to find the origin of the problem, and the appropriate solution.

No.	Check Item	OK	Corrective Measure(s)
1	Unplug the GP's Power Cord. Disconnect all other cables from the GP.		
2	Re-connect the GP's Power Cord and touch the top left corner of the GP's screen to enter OFFLINE mode.		Reference Ch. 4 OFFLINE MODE
3	Is the SET UP TOUCH PANEL screen's data correct? Path: [MAIN MENU] to [INITIALIZE] to [SET UPI/O] area		Correct the settings. Reference 5.4.3 SET UP TOUCH PANEL
4	Is the TOUCH PANEL diagnostic result OK? Path: [MAIN MENU] to [SELF-DIAGNOSIS] area		Reference 6.3 SELF-DIAGNOSIS If not OK, ((H))
5	Are any tag address settings incorrect?		Correct the settings. Reference Operation Manual Reference Tag Reference Manual
6	Unplug the GP's Power Cord and check that the PC to GP's data transfer cable is connected correctly.		Reference Operation Manual
7	Reconnect the GP's Power Cord and resend the previously corrected data, or other, normal, data to the GP.		
8	Unplug the GP's Power Cord, disconnect the data transfer cable and connect the PLC's data transfer cable.		Be sure that only the GP's Power Cord and the PLC's data transfer cable are connected. Reference 3.2 Wiring Cautions Reference PLC Connection Manual
9	Reconnect the GP's Power Cord and check the GP's display. Is it correct?		If not, ((S))
10	Unplug the GP's Power Cord, check that all the GP's cables are connected correctly, and reconnect the GP's Power Cord.		
11	Does the GP's touch panel operate correctly?		If not, check to find the cable that is causing the problem. ((H))

Note: The T-Tag touch area is normally a square shape, however if the Tag has been narrowed (stretched) to the point of being a single line, or is overlaid on top of another T-tag, the tag will not function correctly.

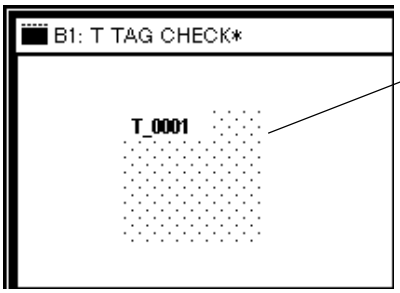

When the T-tag's dotted pattern appears like this, the tag has been properly placed.

6.3 SELF-DIAGNOSIS

The GP unit is equipped to check its own System and Interface for any problems. Use it to help diagnose any problems.

1. GP SELF-DIAGNOSIS Item List

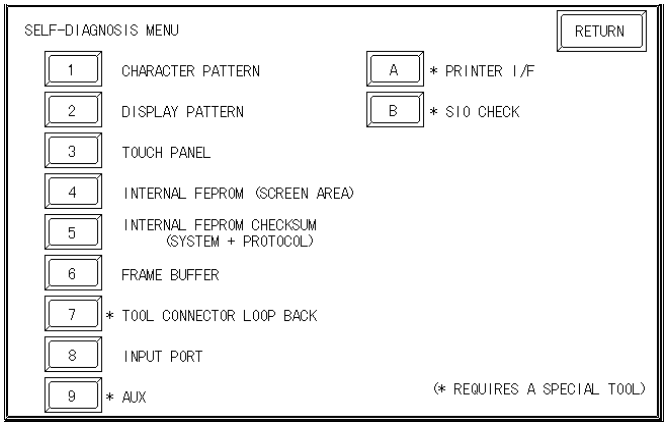

1 Checks the characters inside the internal Character ROM.

2 Checks all the figures and tiling patterns.

3 Checks each GP touch panel square.

4 Checks the internal hard disk contents (FEPROM).

5 Checks the System and Protocol of the GP Internal Memory (FEPROM).

6 Checks the internal display memory (Frame Buffer).

7 *Checks the Tool Connector control lines and send/receive lines.

8 Checks the Input Port. (for Digital's maintenance use only)

9 *Checks the AUX control line.

A *Checks the printer interface.

B *Checks the RS-232C and RS-422 send/receive lines.

Note:

- **The SELF-DIAGNOSIS items marked with an asterisk (*) require special tools. Please prepare the required tool (cable) required for each test.**

2. SELF-DIAGNOSIS - Details

This section explains the contents of SELF-DIAGNOSIS. For information on how to operate the Screen, Reference ***Chapter 4, "OFFLINE Mode";*** *for information about how to set up the Special Tools,* Reference ***Chapter 3, "Installation and Wiring".***

CHARACTER PATTERN

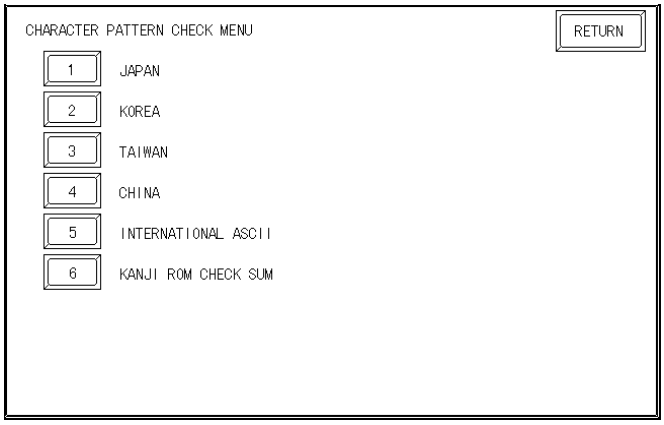

Use this check, which runs the character ROM CHECK-SUM CHECK, when characters do not display on the screen. Check each font pattern or the Kanji ROM using the sub-menu displayed above. If everything is normal, **OK** displays; if there is a problem, **NG** displays.

DISPLAY PATTERN

Used when the buzzer will not sound and when the device contents will not display correctly to check the drawing function. It does this by running checks on the various screen pattern displays (9 screens) and on the ON/OFF Display. When the ON/OFF Display is checked, the Buzzer ON/OFF check is run simultaneously. If everything is normal, **OK** displays; if there is a problem, **NG** displays.

TOUCH PANEL

Touch Panel check. Checks if each touch cell highlights when pressed.

INTERNAL FEPROM (SCREEN AREA)

Important

- ***When this check is carried out, all the contents in the memory are erased. Please make sure that all data is backed up before running this check.***
- ***After running the check, initialize the internal memory (FEPROM)***

This feature checks for any problems that may arise in the display. But to run the check, a password*1 is necessary.

When running the check, the screen will change as follows.

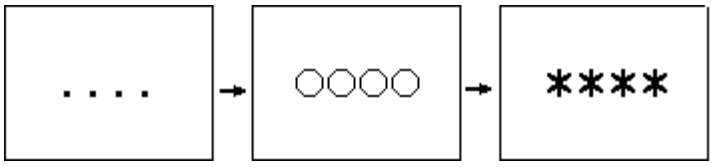

***1** *Enter the password as setup in the INITIALIZE option, or the default password 1101.*

When the FEPROM is normal, **OK** displays; if there is a problem, an error message appears.

The marks that appear on the GP screen indicate which action is being performed. The "O" mark indicates an erase check, and the "∗" mark indicates a R/W check.

INTERNAL FEPROM CHECKSUM (System & Protocol)

The Internal FEPROM System and Protocol check searches for any problems that may arise during operations. When running the check, the screen will change as follows.

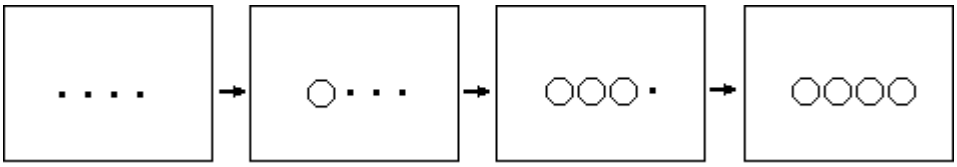

When the FEPROM is normal, **OK** displays; if there is a problem, an error message appears. This check does not erase the System or Protocol.

FRAME BUFFER

The Frame Buffer (display memory) Check looks for any display problems that may develop. When everything is normal, **OK** displays; when there is a problem, an error message displays.

TOOL CONNECTOR LOOP BACK

Use the Tool Connector Control line and Send/Receive line check when the GP cannot send and receive data from the PC. To run the check, connecting a *Tool Connector Check Loop Back Cable* (Dsub9 pin, pin-side) mounted to the *Downloading Cable* (provided in the software package) is necessary.

When everything is normal, **OK** displays; when there is a problem, an error message displays.

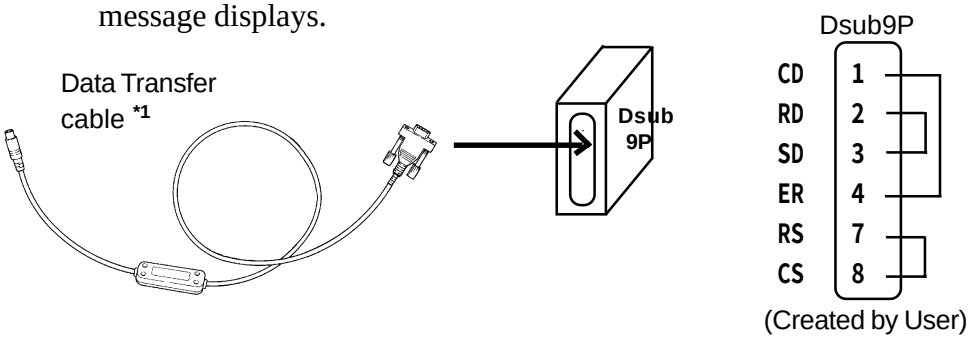

*1 *When using GPW-CB-SET as a transfer cable, a loop back cable for the data transfer cable should be made, as shown here.*

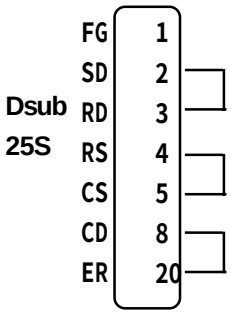

AUX

This check uses the Input unit's LED lights, in the following order.

① Set AUX lines from TSW0 to BUZZ, ON.

② Once all of them turn ON, they will turn OFF in the same order.

③ Once all of them have turned OFF, the check is finished.

PRINTER I/F

PRINTER I/F checks to see if the printer operates normally. To perform this check, the printer must be connected.

When a Print Buffer is used, sometimes an error occurs, so **be sure to connect the printer directly to the GP.**

If the connection is normal, the printed section displays **20~7D**<HEX> and **A0~DF**<HEX> and **OK**; if there are problems, an error message appears.

SIO CHECK

Checks the RS-232C and RS-422 SIO lines for areas where communication problems develop. In the menu, select which check to run. To run the check, connecting the SIO cable is necessary. If all is normal, **OK** displays; if there is a problem, an error message appears.

The SIO cable wiring is as shown below. (RS-232C, RS-422 common)

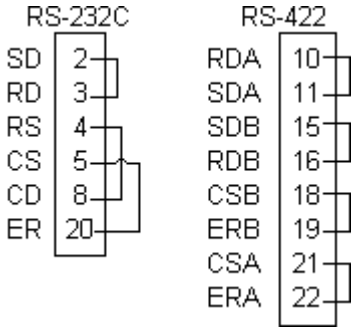

6.4 Error Messages

This section explains the messages that appear when an error has occurred in the GP unit during RUN mode. The origin of the problem behind each error message is explained with appropriate ways of disposing of the error. After a problem has been solved, unplug the GP's power cord and then reattach it. ***(Only the latest error message will appear on the GP screen)***

1. Error Message List

The error messages listed below appear on the GP unit. Instructions on how to find and solve problems causing these error messages are explained on the following pages.

- SYSTEM ERROR
- ILLEGAL ADDRESS IN SCREEN DATA
- UNSUPPORTED TAG IN SCREEN DATA
- PLC NOT CONNECTED (02:FF) and (02:F7)
- PLC NOT RESPONDING (02:FE)
- RECEIVE DATA ERROR (02:FD)
- GP STATION NO. DUPLICATION ERROR (02:F9)
- NETWORK ADDRESS ERROR (02:F8)
- PLC COM. ERROR
- SCREEN MEMORY DATA IS CORRUPT
- CLOCK SETUP ERROR
- SCREEN TRANSFER ERROR
- SCREEN TAG LIMIT EXCEEDED
- OBJ. PLC HAS NOT BEEN SETUP

2. Error Message Details

SYSTEM ERROR

Indicates a fault in the basic operations of the GP.
Following the error message, an error code, as shown, will appear. Report the error number, and details on how the error developed, to your local GP distributor. .

(Ex. 1) • SYSTEM ERROR (03 : x x)
Displays when a PC transferred file cannot be rebuilt.

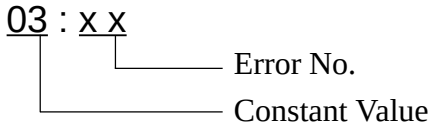

(Ex. 2) • SYSTEM ERROR (x x x : x x x : x x x)
Displays in RUN mode when a file cannot be rebuilt.

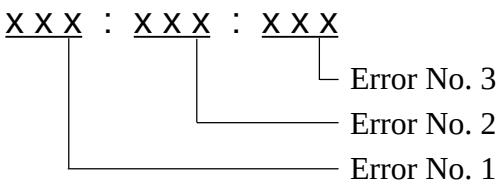

- Check if the GP's Power Cord and the Input signal line have been wired incorrectly.
- Check that the FG line has been grounded correctly, according to standards.
- Re-send the screen data from the PC to the GP.
- If other types of communication errors have also occurred, try to correct those problems also.

RECEIVE DATA ERROR, PLC COM. ERROR

If the abovementioned methods do not solve the problem, please contact your local GP distributor.

• When OFFLINE mode displays during in RUN mode

When the GP changes to OFFLINE mode without the user first pressing the screen, there is a possibility that the screen data has been damaged. In this case, after the SYSTEM ERROR displays, the screen automatically reverts to OFFLINE mode after about 10 seconds. Run the INITIALIZE MEMORY command and transfer the GP screen data again from your PC.

ILLEGAL ADDRESS IN SCREEN DATA

Caused by an overlap of addresses.
Following the error message, error codes, as listed below, appear. If the error cannot be fixed, please report the error code and details on how the error developed to your local GP distributor.

ILLEGAL ADDRESS IN SCREEN AREA **(00b:XXX:XXX)**

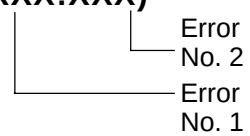

Overlapping Addresses Table

Error 1	Error 2	Meaning
0C1	191	All or part of the T-File*1 or S-tag address range overlap the addresses of System Data Area.
	192	
	193	
0C2	194	All or part of the System Data Area address, A-File, or S-tag address range overlap the addresses setup in a T-File.*1
	195	
	196	
0C3	197	All or part of the T-File*1, or the S-tag or K-tag address range overlap the address range set in an A-file.
	198	
	199	
0C9	19B	All or part of the T-File*1, or the S-tag or K-tag address range overlap the address range set in an A-file.

Note:

- **Overlapping addresses, other than the ones mentioned above, can also cause the Illegal Address message.**

E.g. **When the starting address of the System Data Area is set to 100, and the tag below is setup:**

Tag Name/ Part ID No.	Word Address	Tag Format
N1	99	BCD32

Note:

The N-tag is set to 32 bits, meaning it uses two word addresses. Since the first address is 99, the second address must be 100. Address 100 is ineligible for use since it has already been used for the System Data Area.

UNSUPPORTED TAG IN SCREEN DATA

This message appears when the GP currently in use does not support the desired Tag. Be sure to only use Tags that are supported by the current GP.

For Tag details, Reference ***Tag Reference Manual***

***1** *For details about the T-File (trend graph) and A-File (alarm messages),*
Reference ***Tag Reference Manual***

PLC NOT CONNECTED (02:FF) (02:F7)
Displays when communication with the PLC has stopped for over 60 seconds, when there is a transmission timeout error, or when there is excess *noise*. Check the correspondence cable wiring and connect correctly.

PLC NOT RESPONDING (02:FE)
Displays when there is a Reply Timeout Error, or when there is excess noise.

The origin of the problem and the matching solutions are listed in the table below.

PROBLEM	SOLUTION
1. The PLC is not turned ON.	1. Turn On the host's power switch
2. GP unit INITIALIZE setup (Setup I/O, PLC Setting) is incorrect.	2. Setup the unit correctly and match up with the current host and Communication Cable.
3. The host and GP powering up process was incorrect.	3. Turn the host's power On first, wait 2~3 seconds, then power up the GP unit.
4. The Communication Cable was not connected properly.	4. Check the Communication Cable wiring and connect it up properly.

RECEIVE DATA ERROR (02:FD)
This problem arises as a result of one of these three:

- There is a problem in trying to receive the data
- The connected PLC and the PLC setup for the data is different
- Noise

These errors, except for noise, appear when the Communication Cable is pulled out when the GP unit is On, or when normal communication operations are being run, but the GP has been powered Off, then back On. To solve the problem, simply begin running transmissions again.

When the error is a result of noise, correct any improper connections.

GP STATION NO. DUPLICATION ERROR (02:F9)
This error appears for one of two reasons:

- The GP number is same as the station number for another GP. Check all the GP station numbers.
- In the middle of correspondences, the PLC power has been turned On/Off. Reset the power on the PLC and GP, in that order.

NETWORK ADDRESS ERROR (02:F8)
The SIO address setup for the GP is different from other GP's. Check the address setup for all the GP's.

PLC COM. ERROR

Appears when the address setup for tags exceeds the address range on the host side. Check the Error Number that appears and use the following table to solve the problem.

PLC COM. ERROR **(** 02 : x x **)**

Error code (*see the table below*)

Constant Value

Error #	Origin	Solution
FC	The communication settings for this unit and the host do not match.	Fix the SIO communication settings to match the host.
FB	The address set on a tag, the address used for storing data for Trend Graph, or the address set by an alarm message is out of a set range. (address range error) * Memory to Memory type. * Siemen's PLC Series	* When using GP-PRO2's Memory to Memory Type: Set the addresses within the set range of the System Data Area. (0~1023) * When using Siemen's Series PLC Type: Set up the Data Block in the PLC where the System Data area is set.
FA	Address range error	Set the addresses within the allowable range.
53	When using a Matsushita Electronics PLC, and there are too many screen tags, the PLC will not receive data.	Decrease the number of tags on the screen.
51	The tag address, Trend graph data storage address, Alarm message Registry address, and the like, do not exist in the PLC's internal memory. (In the case of Fuji Electric PLC)	Setup the addresses in a device range that exists.
Others	The Error Number for each PLC is displayed. Look up the Error Number in the indicated PLC manual. Or, report the Error Number to the PLC maker.	

Note:

- **Disregard the above table if Error Number 51 appears and you are using a PLC other than Fuji Electric. Look up the error contents in your PLC Connection Manual and follow those instructions.**
- **Disregard the above table if Error Number 53 appears and you are using a PLC other than Matsushita Electronics. Look up the error contents in your PLC Connection Manual and follow those instructions.**
- **In Hitachi's HIDIC H (HIZAC H) Series, the error code is divided into 2 bytes, whereas the GP Error Number is composed of 1 byte codes.**

E.g.

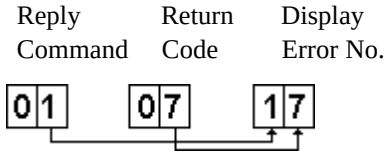

Note:

- **When the displayed error number is 8*, or 5*, use only the left column as the error number.**
- **In Toshiba's PROSEC T Series, the Error Code is 4 places long; on the GP, Error Numbers are displayed and changed into Hexadecimal.**

E.g. 0134 ⟶ 86

- **With the Allen-Bradley PLC-5 and SLC-500 Series, the EXT/STS error codes have been re-mapped to start at D0 HEX, so they will not conflict with other error codes. When looking up the error number in the PLC manual, subtract D0 h from the GP error code to find its error value.**

E.g.

GP Error Code		PLC Error Code
D1	—>	01
EA	—>	1A

SCREEN MEMORY DATA IS CORRUPT

Displays when the checksum of the screen memory data does not match because of a corruption in the screen files.

This error message is followed by error codes. By referring to the error code, you can check the screens that have errors. When a screen file has been corrupted, delete that file, and make a new one (or recall a backup copy if available).

SCREEN MEMORY DATA IS CORRUPT (x x x x : x x x x)

The Screen Number that has an error. (Displays only one per Screen Number.)

The number of screens that have errors (Decimal)

CLOCK SET UP ERROR

This message displays when the lithium backup battery's voltage for the internal clock runs low and may be due to the GP's being unused for a period of time. To clear the error, you will need to turn the GP's power OFF and then ON. Leave the GP ON continuously and the battery's charge will become sufficent for backup after 24 hours, and will be fully charged in approximately 96 hours. If the battery is incorrectly replaced, the battery may explode. To avoid the danger, please do not replace the battery yourself. When the battery needs a replacement, please consult with your local GP distributor.

After changing the backup battery, set up the internal clock.

Reference **Chapter 5 - Initialization.**

Note: The life span of the backup battery depends on the battery's ambient temperature and the amount of current being charged and used. The table below gives a general indication of how long the battery will last.

Battery 's Ambient Temperature	40°C or less	50°C or less	60°C or less
Expected Life Span	more than 10 yrs.	more than 4.1 yrs.	more than 1.5 yrs.

SCREEN TRANSFER ERROR

Displays when an error occurs in the data transmission from the screen editor to the GP panel. Try re-transmitting the screen data.

SCREEN TAG LIMIT EXCEEDED (max. of 384)

When tags are setup beyond the tag limit, these tags are made invalid. Tags are invalidated from the end tag, in the opposite order in which they were registered. Plus, when tags involve registered Windows and loaded screens, they are invalidated in this order: Window Registry, Load Screen. Further details for when multiple displays are set to one screen:

1. Disregard registered windows, starting from the end screen.
2. Disregard loaded screens, starting from the end screen.

To correct this problem, reduce the number of tags to within the allowed limit.

OBJ. PLC HAS NOT BEEN SETUP (02:F9)

The host PLC setup in the Editor program (i.e. the .prw file) does not match the PLC in use. Use the Error Code that follows the error message to select the proper PLC type in the GP and correct the INITIALIZE setup.

OBJ. PLC HAS NOT BEEN SETUP (x x)

The PLC number (*Hexadecimal*) written to the System File

(See next page's Table)

PLC #	PLC TYPE	PLC #	PLC TYPE
0	SYSMAC C	20	SIEMENS S5 135-115
1	MELSEC-AnN（LINK）	21	SIEMENS S5 3964(R) protocol
2	NEW SATELLITE JW	22	Allen-Bradly PLC-5
3	FA500（for GP-PRO/PBⅢ：FACTORY ACE）	28	Allen-Bradly SLC500
4	MICREX-F	63	FA500 1：n（for GP-PRO/PBⅢ：FACTORY ACE 1：n）
6	TOYOPUC-PC2	66	GE FANUC 90SNP
7	MEWNET-FP	67	HIZAC EC
8	HIDIC-S10α	68	IDEC
9	Memocon-SC	69	IDEC
B	MELSEC-AnA（LINK）	6A	IDEC
D	SYSMAC CV	6B	FANUC Power Mate
E	PROSEC EX2000	6C	MICRO03
10	HIZAC H	81	MELSEC-AnN（CPU）
11	MELSEC-FX	8B	MELSEC-AnA（CPU）
12	MELSEC-F2	0C	KOSTAC SR21/22
14	KOSTAC SG8	6D	KEYENCE
15	PROSEC T	1C	MELSEC-QnA（LINK）
4D	MEMORY LINK SI0 TYPE	1D	MELSEC-QnA（CPU）
18	FLEX-PC	6F	FLEX-PC（CPU）
1B	TC200	6E	SELMART
1F	SIEMENS S5 90-115		

Chapter 7
Maintenance

1. Regular Cleaning
2. Periodic Check Points
3. Changing the Backlight

7.1 Regular Cleaning

1. Cleaning the Display

When the surface or the frame of the display gets dirty, soak a soft cloth in water with a neutral detergent, wring the cloth tightly, and wipe the display.

STOP

- **Do not use paint thinner, organic solvents, or a strong acid compound to clean the unit.**
- **Do not use hard or pointed objects to operate the touch-screen panel, since it can damage the panel surface.**

2. Installation Gasket Replacement

The installation gasket protects the GP and improves its water resistance.

Important

A gasket which has been used for a long period of time may have scratches or dirt on it, and could have lost much of its water resistance. Be sure to change the gasket periodically (or when scratches or dirt become visible).

■ Attaching the Installation Gasket

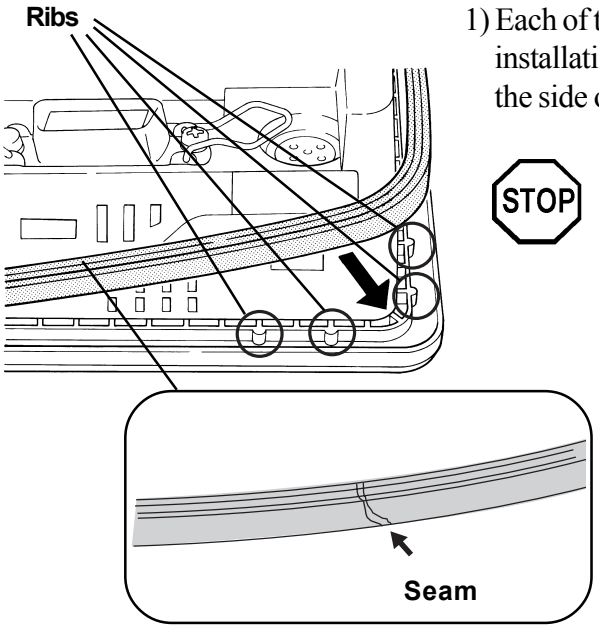

1) Each of the GP's corners has 4 ribs that hold the installation gasket in place. Push the gasket into the side of the GP, so that it is held by all 4 ribs.

STOP

- **The gasket is flexible, but not elastic, and may tear if stretched too far. Do not stretch the gasket around the ribs, only push.**
- **Be sure the gasket's seam is not inserted into any of the unit's corners, only in the straight sections of the groove. Inserting it into a corner may lead to its eventually tearing.**

Cross Section View

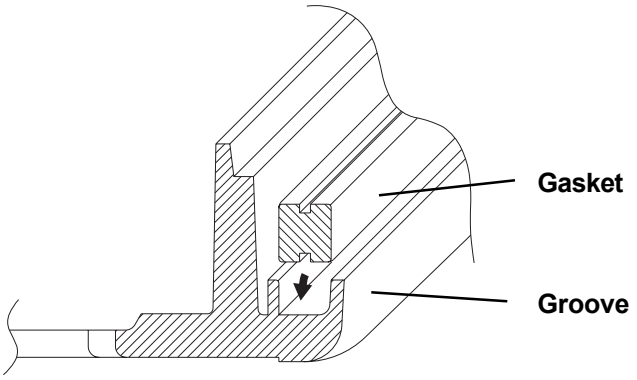

Note: **Be sure to insert the packing into the groove so that the long side is vertical.**

2) Insert the gasket into the GP's three remaining corners, as shown in step 1.

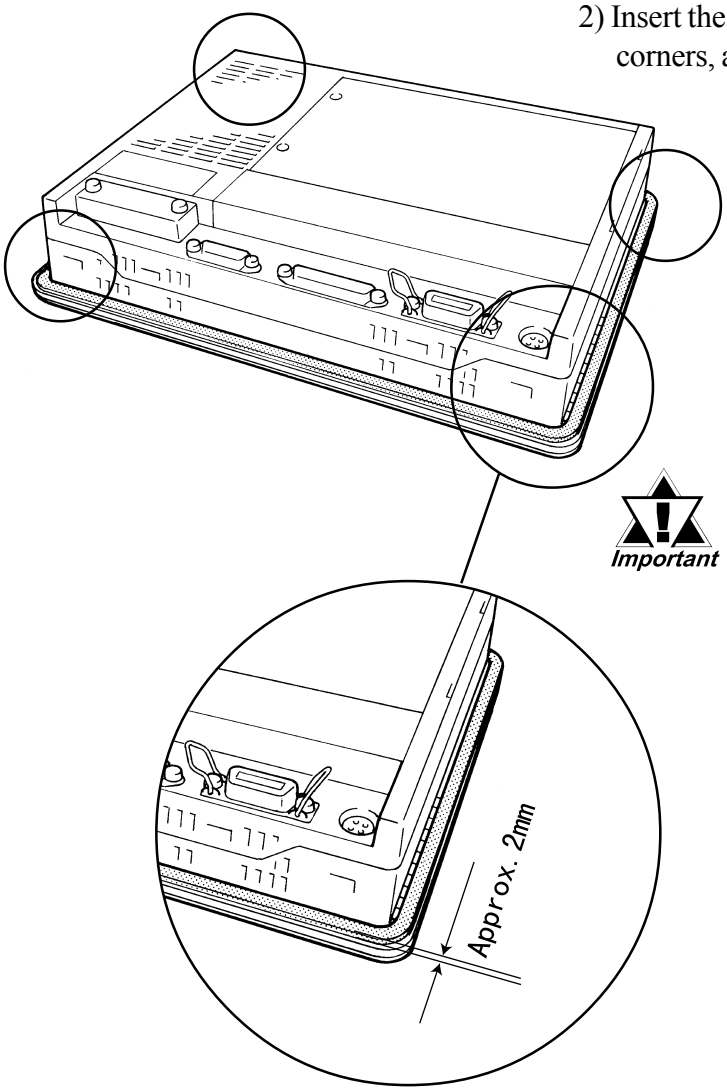

Important

- ***The gasket must be inserted correctly into the groove for the GP's moisture resistance to be equivalent to IP65f.***
- ***The upper surface of the packing should protrude approximately 2mm out from the groove. Be sure to check that the packing is correctly inserted before installing the GP into a panel.***

7.2 Periodic Check Points

To keep your GP unit in its best condition, please inspect the following points periodically.

GP Operation Environment

- Is the operating temperature within the allowable range?

  (0°C to 50°C for GP-477R**; 0°C to 40°C for GP-577R**)

- Is the operating humidity within the specified range?

  (20% RH to 85% RH for GP-477R**; 30% RH to 85% RH for GP-577R**)

- Is the operating atmosphere free of any corrosive gasses?

Electrical Specifications

- Is the input voltage correct?

  Units using AC 85 to 132V:

  GP477R-EG11, GP577R-TC11, GP577R-SC11

  Unit using DC 24V±20%:

  GP477R-EG41-24VP, GP577R-TC41-24VP

Related Items

- Is are all cables connected properly? Are they loose?
- Are all mounting brackets holding the unit securely?
- Are there many scratches or traces of dirt on the installation gasket?

7.3 Changing the Backlight

Replacing the backlight is only possible with GP-577R Series units, which use a CFL type flouresecent tube. The GP-577R series backlight is a long-life type, however the actual life of the backlight unit will vary depending on the GP's operating conditions.

GP577RT-BL00-MS (for the GP577RT) 40,000 hour life (appr. 4.6 years)

GP577RS-BL00-MS (for the GP577RS) 25,000 hour life (appr. 2.9 years)

Refer to the following data when ordering your GP unit's backlight.

Warning

- **Whenever changing the Backlight, be sure the GP's power cord has been disconnected and that the unit is cooled down.**
- **When the GP's power cord is connected and the GP is ON, high voltage runs through the wires in the backlight area—do not touch them!**
- **When the GP's power has just been turned OFF, the Backlight area is still very hot! Be sure to wear gloves to prevent being burned.**

Important

- ***Be sure to change both backlights, i.e. the upper and the lower units.***
- ***Do not allow water, oil or handprints to be left on the tube, since they can all reduce the backlight's life.***

■ Items Required When Changing The GP's Backlight

◆Phillips type screwdriver (no.2) for GP's rear cover attachment screws.

◆Phillips type screwdriver (no.0) for backlight unit's metal cover.

◆One pair of clean (preferably new) cotton gloves.

(Also, a small container for placing the attachment screws may help to prevent them from becoming lost or misplaced)

■ How to replace the GP577RT's backlight

This unit has two backlights, one at the top and one at the bottom. The following explanation is for changing the top backlight. To change the bottom backlight, simply repeat the procedures shown here in the same order.

Important

Be sure to change both backlights at the same time.

Note:

The GP577RT backlight's CFL tube and housing are combined in one unit. Be sure to change only this combined unit.

1) Turn the GP's power OFF (i.e. disconnect the GP's power cord).
2) Use a Phillips screwdriver to remove the case's two rear attachment screws, and pivot the rear cover open, starting from the top of the unit. (The cover is fastened at the bottom, and hinges open).

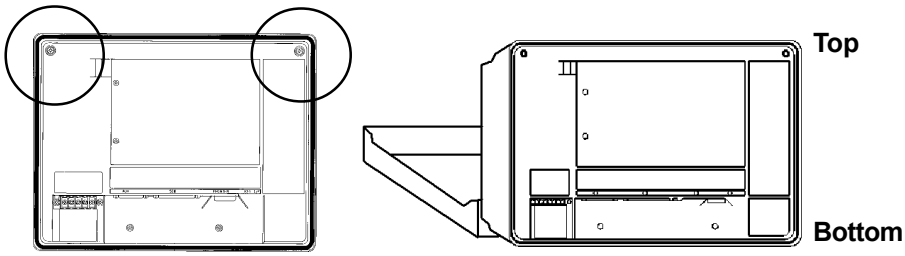

STOP

The rear cover cannot be completely removed. If you attempt to remove it, you may break the cover.

3) Disconnect the upper backlight's power connector from the GP's inverter.

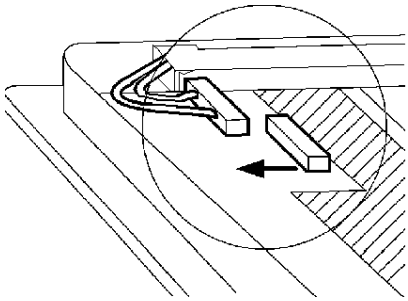

4) Loosen the backlight unit holder's two attachment screws, and remove the backlight unit's metal cover.

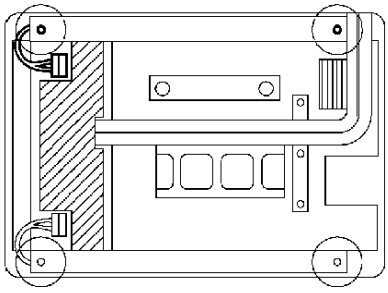

STOP

Since the attachment screws are small, be sure not to lose them or allow them to fall inside the GP's case.

5) Remove the old backlight unit.

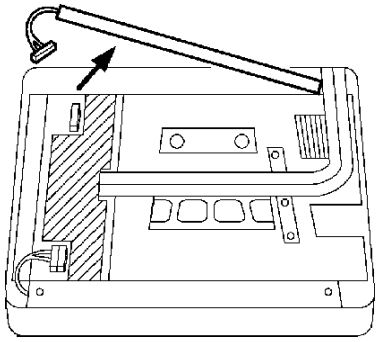

6) Insert the new backlight into the unit.

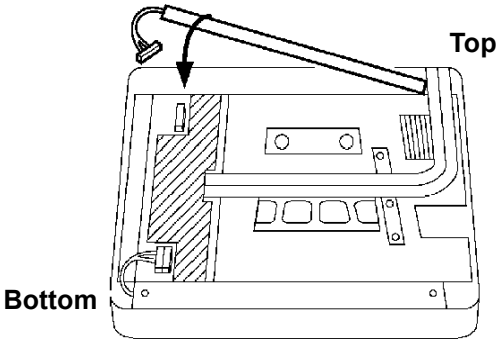

Important

The upper and lower backlight units are different.

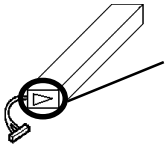

The upper backlight unit can be distinguished by the arrowhead mark shown. Install it on the upper side of your GP.

7) Insert the metal backlight cover's three positioning tabs into the backlight's three positioning slots. Next, retighten the cover's two attachment screws.

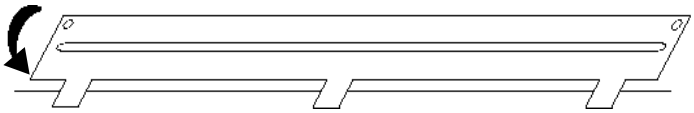

8) Reattach the backlight unit's power connector.

9) Repeat these steps for the GP's bottom backlight unit.

10) After both backlight units are changed and the power connectors reattached, close the rear case and reattach the case's two attachment screws.

Important

- ***Be sure not to pinch or cut any of the GP's internal wiring when closing the case.***
- ***If the attachment screws are missing, check that they are not left inside the GP's case. Turning the GP's power ON while they are left inside the GP may cause troubles.***

Note:

- ***When the replacement of the backlight is finished, turn on the GP and make sure that the screen is displayed correctly. If the unit malfunctions, please contact your Pro-face dealer for service and advice.***

■ Replacing the GP577RS's backlight

This unit has two backlights, one at the top and one at the bottom. The following explanation is for changing the top backlight. To change the bottom backlight, simply repeat the procedures shown here in the same order.

Important

- ***Be sure to change both backlights at the same time.***

1) Turn the GP's power OFF (i.e. disconnect the GP's power cord).

2) Use a Phillips screwdriver to remove the case's two rear attachment screws, and pivot the rear cover open, starting from the top of the unit. (The cover is fastened at the bottom, and hinges open)

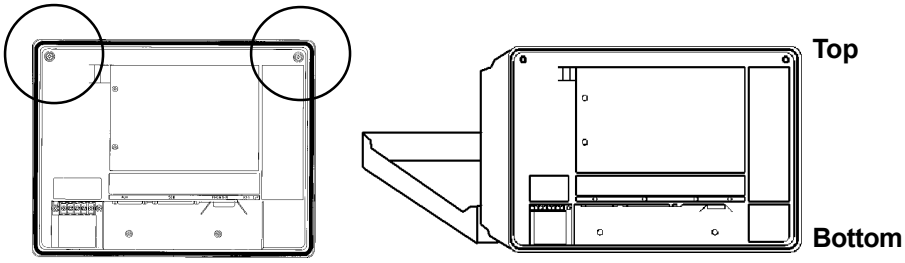

STOP

- **The rear cover cannot be completely removed. If you attempt to remove it, you may break the cover.**

3) Disconnect the upper backlight's power connector from the GP's inverter.

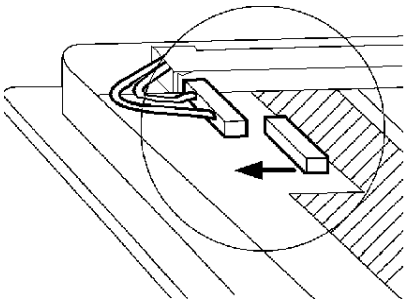

4) Loosen the backlight holder's two attachment screws, and remove the backlight's metal cover.

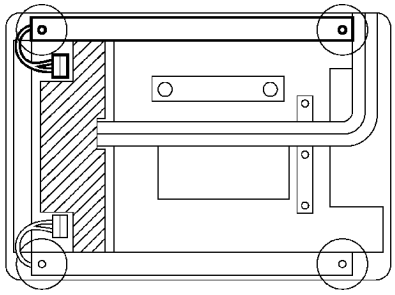

STOP

- **Since the attachment screws are small, be sure not to lose them or allow them to fall inside the GP's case.**

5) Remove the old backlight unit.

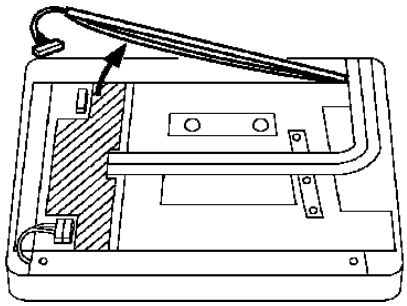

6) Insert a new backlight into the backlight's guide channel. Be sure that the power connector's two wires are correctly aligned with their respective grooves. (see picture below)

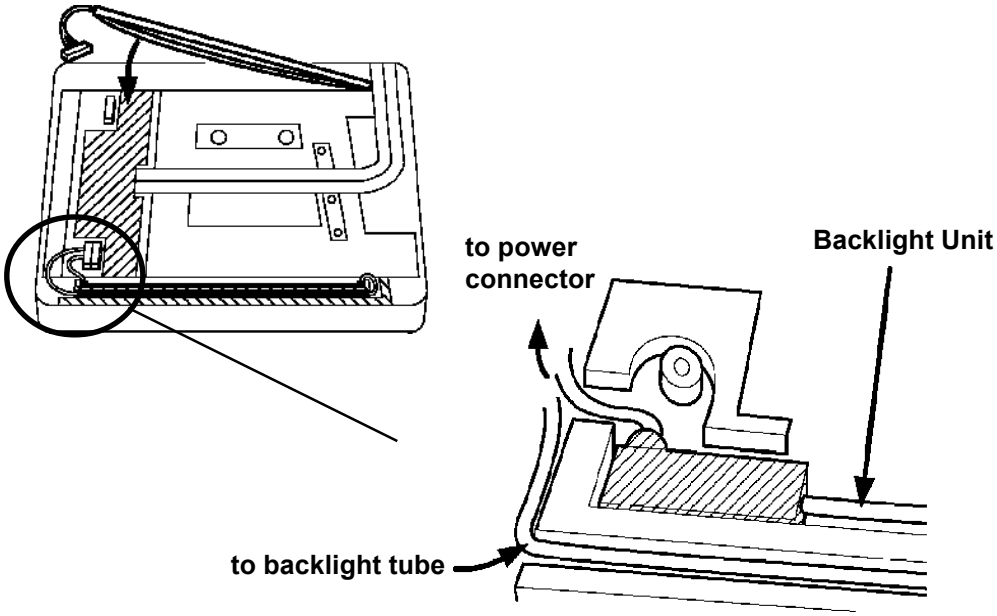

7) Next, retighten the backlight cover's two attachment screws.

8) Reattach the backlight unit's power connector.

9) Repeat these steps for the GP's bottom backlight unit.

10) After both backlight units are changed and the power connectors reattached, close the rear case and reattach the case's two attachment screws.

Important

- *Be sure not to pinch or cut any of the GP's internal wiring when closing the case.*
- *If the attachment screws are missing, check that they are not left inside the GP's case. Turning the GP's power ON while they are left inside the GP may cause troubles.*

Note:

- *When the replacement of the backlight is finished, turn on the GP and make sure that the screen is displayed correctly. If the unit malfunctions, please contact your Pro-face dealer for service and advice.*

Index

A

About the GP's Display Panel vi
AUX I/F (Input/ Output) 2-7

B

BLACK/WHITE REVERSE (only GP-577R) 5-10
BUZZER TERMINAL OUTPUT 5-3

C

COMMUNICATION SETUP 5-13
CANCEL Key 4-6
CE Marking Notes vii
Changing the Backlight 7-4
CHARACTER STRING DATA Mode List 5-7
CHARACTER STRING DATA SETUP 5-6
Cleaning the Display 7-1
COMMUNICATION FORMAT 5-9
COMMUNICATION RATE 5-9
CONFIRM Key 4-6
CONFIRM, START, CANCEL Keys 4-6
Connecting the GP Power Supply Terminals 3-6
Connecting the GP's Power Cable 3-5
Connecting the GP's Power Supply 3-7
Connecting the Printer Cable 3-9
Connection List 5-16
CONTRAST ADJUSTMENT (Only for GP-577RS) ... 5-12
CONTROL 5-9
Creating an Installation Opening 3-1
CUSTOMIZE SETUP (n:1) 5-19

D

DISPLAY DEVICE SETTINGS (only for GP577RS) 5-14
DATA FORMAT 5-6
DATA LENGTH 5-9
Display Features 2-3

E

Electrical Specifications 2-1
Entering Numbers 4-4
Environmental Specifications 2-2
Error Messages 6-11
External Dimensions 2-12
External Interfaces 2-5

F

Features and Performance 2-3
FONT SETTING 5-22
FORCERESET 5-11

G

GLOBAL ACCESS WINDOW 5-5
GLOBAL WINDOW 5-5
GLOBAL WINDOW SETUP 5-5
Graphic Panel Dimensions 2-11
Grounding the GP 3-8

I

Initialization Screen 5-1
INITIALIZE INTERNAL MEMORY 5-21
Installation Gasket Replacement 7-1
Initialization Items 5-2
INITIALIZE MEMORY 5-2
INITIALIZE-Standard Operation 4-4
Initializing the GP 5-1
Input Circuit 2-8
Installation 3-1
Installation and Wiring 3-1
Installation Fasteners 2-13
Installation Mounting Hole Dimensions 2-14
Interface Specifications 2-6
IP65f 2-2

M

Maintenance 7-1
Maintenance Parts 1-3
MONOPOLIZE 5-20

N

Names and Functions of GP Parts 2-10
NETWORK INFORMATION ADDRESS 5-17

O

OFFLINE Mode's Main Menu 4-3
Operating the GP 1-1
Optional Equipment 1-5
Optional Parts 1-3
Output Circuit 2-8

P

PLC SETUP 5-15
Package Contents ix
PARITY 5-9
PASSWORD SETUP(0-9999) 5-3
Personal Computer Interfaces 1-3
Placement of I/O Signal Lines 3-9
PLC Interfaces 1-3
PRINT (only GP-577R) 5-10
Printer Interface 2-6
PRINTER TYPE 5-10

R

RECEIVE TIMEOUT 5-13
REFRESH RATE 5-14
REGISTRATION NO. (1-256) 5-6
RETRY COUNT 5-13
Return To Main Menu 4-7
Return To Previous Screen 4-5
RUN 4-3
RUN Mode 6-1

S

SET UP TOUCH PANEL 5-11
Safety Precautions v
SCREEN DATA TRANSFER 4-3
Screen Memory 2-4
Securing the Installation Fasteners 3-3
Selecting A Menu 4-4, 4-6
Selecting Setup Conditions 4-4
SELF-DIAGNOSIS 6-7
SELF-DIAGNOSIS-Standard Operation 4-6
Serial Interface 2-9
SET UP OPERATION SURROUNDINGS (n:1) 5-16
SET UP OPERATION SURROUNDINGS (1:1) 5-15
SET UP PRINTER 5-10
SET UP SCREEN 5-2
SET UP SIO 5-9
SET UP TIME 5-2, 5-21
STAND-BY MODE TIME (0-255) 5-3
START Key 4-6
START TIME (0-255) 5-3
STATION SETUP (n:1) 5-17
Steps to run FORCE RESET 5-11
STOP BIT 5-9
Structural Specifications 2-2
SYSTEM AREA SETUP 5-4
SYSTEM AREA-READING AREA SIZE (0-256) 5-16
System Design 1-2
SYSTEM ENVIRONMENT SETUP 5-2, 5-3
SYSTEM SETUP 5-3

T

Touch Panel / Clock Accuracy 2-4
Troubleshooting Checklists 6-3
TARTING ADDRESS OF SYSTEM DATA AREA 5-16
To Prevent GP Damage vi
To prevent this effect vi
TOUCH BUZZER SOUND 5-3
TOUCH OPERATION MODE 5-11
Transferring Screen Data 4-8
Troubleshooting 6-2
Turning the GP's Power ON 4-1

U

UL/c-UL (CSA) Application Notes vii

V

Verification List 5-18

W

What is IP65f? viii
WINDOW LOCATION 5-6
Wiring Cautions 3-5
Word Byte LH/HL Order 5-7